March 31st, 2021

Request for Qualifications (RFQ)

Jordan Smith

City of Fargo Transit (MATBUS)

3/31/2021

TABLE OF CONTENTS

I. Agency Overview 2
II. Purpose of Request 2
III. Background Information 2
IV. Project Objective 2
V. Project Budget 2
VI. Proposal Security 2
VII. Bid Protest 3
VIII. Scope of Work and Performance Tasks 3
IX. Implementation Schedule 4
X. Evaluation and Selection Process 5
XI. Proposal Content and Format 6
XII. Submittal Information 7
XIII. General RFQ Requirements 7
XIV. Additional Information 8
XV. Contractual Information 8
XVI. Payments 9
XVII. Federal and State Funds 9
XVIII. Title VI Assurances 9
XIX. Termination Provisions 11
XX. Limitation on Firm 11
XXI. Conflict of Interest 11
XXII. Insurance 11
XXIII. Risk Management 12
XXIV. Federal Clauses 13
Exhibit A – Cost Proposal Form 34
Exhibit B – DEBARMENT AND SUSPENSION CERTIFICATION 35
Exhibit C - LOBBYING RESTRICTIONS CERTIFICATION 36
Exhibit D – Standard Form 330 37
Exhibit E – Stertil-Koni Site Specific Drawings 42

I. Agency Overview

The City of Fargo Transit Department operates fixed route and paratransit services in the Fargo-Moorhead Metro Area. The Cities of Fargo and Moorhead currently operate the Metro Transit Garage (MTG) which is a maintenance facility. The facility is located at 650 23rd St N. Fargo, ND and was constructed in 2007.

II. Purpose of Request

The intent of this RFQ is to receive proposals from qualified firms to provide architectural and engineering services to complete a design build for replacement and repairs of the maintenance facility in-ground hoists and drive-over pit.

Requested services include: design services, bidding and contracting services, construction management and other associated services.

III. Background Information

The Metro Transit Garage was constructed in 2007 and has not had any significant updates since. The maintenance facility utilizes two in-ground hoists and one drive-over pit to perform services on the vehicles. The in-ground hoist have reached their useful life and need to be updated to maintain safe and reliable operation. The frame work of the drive-over pit has rusted and is separating from the adjacent concrete. The concrete has started to break apart and the area is not safe to use at this time.

IV. Project Objective

The objective is to hire one firm to design and construct all necessary improvements for the MTG. The MTG Maintenance shop will need to remain open and in operations for the duration of the project, which means the project may be broken down to individual tasks that will be done concurrently.

V. Project Budget

Funding identified for this project consists of funding from the North Dakota Department of Transportation and City of Fargo funds. A total project budget will not exceed $420,000.

VI. Proposal Security

No proposal will be considered by the City of Fargo to be responsive to this request unless accompanied by a cashier's check payable to the City of Fargo by a responsible, solvent bank in the United States in an amount equal to five percent (5%) of the contract amount for the Fargo portion of the contract; or, a bond executed by a surety company authorized to transact business in the State of North Dakota in an amount equal to five percent (5%) of the Fargo portion of the contract amount. Such surety will be retained by the City of Fargo if the successful proposer fails, neglects or refuses to execute the contract, or fails to commence service as required under the contract. The check or

bond of the highest ranked proposer will be returned after the execution of the contract. The check or bond of the second highest ranked proposer will be returned after the execution of the contract with the successful proposer. The checks or bonds of all other proposers will be returned promptly after the award of the contract by the City of Fargo.

VII. Bid Protest

Protests related to this solicitation must be submitted in writing and will only be accepted from prospective Bidder or Offerors whose direct economic interest would be affected by the award of a Contract or failure to award a Contract.

Copies of protest procedure are available on request. Contact Julie Bommelman, 650 23rd Street N, Fargo, ND 58102, for a copy, if desired.

As this procurement is Federally funded, the provisions of FTA Circular 4220.1 (as amended) apply. An appeal to FTA must be received by the cognizant FTA Regional or Headquarters Office with five (5) working days of the date the protestor knew or should have known of the violation.

FTA will review bid protests only in the following circumstances:

a. A protestor has exhausted all administrative remedies with The City of Fargo – Transit.

b. FTA will only review protests regarding the alleged failure of the grantee to have or follow its written protest procedures or its failure to review a complaint or protest.

Alleged violations on other grounds are under the jurisdiction of the appropriate State or local authorities. Alleged violations of Federal law or regulation that provide an applicable complaint procedure shall be submitted and processed in accordance with the Federal law or regulation.

Contractors who have exhausted all administrative remedies with the City of Fargo Transit and FTA can pursue the matter further in the ND state courts.

VIII. Scope of Work and Performance Tasks

At minimum, this project will include environmental, design, plan & specification preparation, bidding/contracting and construction management services. Note that this project may require staging plan(s) to accommodate MTG operations during construction. All tasks must include electrical, plumbing and HVAC changes that may be required.

The below tasks do not need to be completed consecutively. The proposer must provide a written timeline for each task start and end date.

Task 1 – Drive-Over Pit Repairs

This task will include the observation of current conditions and discussions about best repair options. Some options may include repairing current conditions to original build-as specifications, design and construct a flat floor system that would eliminate the drive-over pit, installing a third in-ground hoist, or a combination of any of the previous options.

Task 2 – In-Ground Hoist Replacement

This task includes the demolition and removal of the current in-ground hoists and the engineering and installation of new in-ground hoists that will be supplied by the City of Fargo. The hoist manufacturer will supply a site-specific installation package which includes design and engineering specifications.

IX. Implementation Schedule

1) **Timeline/Schedule**

Advertise RFQ		3/31/2021
Pre-proposal Meeting (1:00 pm – MTG)		4/8/2021
Deadline for proposer's submittal of written requests for clarification Modification of the RFQ and pre-proposal meeting		4/13/2021
Due Date for Submittals (by 2:00 pm)		4/21/2021
Review Proposals/Identify Finalists	(week of)	4/19/2021
Interview Finalists	(week of)	4/26/2021
Deadline for proposer submit written protest *(if applicable)*		5/3/2021
Fargo City Commission Approval and Recommendation of Award Contract and notice to proceed issued		5/17/2021
Contract Negotiations	(after)	5/17/2021
Deadline for proposer's submittal for written post-award protest		5/24/2021
Cities response to Post-Award protest		5/31/2021
Deadline for proposer's submittal of written appeal of post-award		06/07/2021
Hold hearing of appeal of post-award decision w/ Fargo City Commission		06/14/2021
City's final written determination on appeal issued All decisions regarding protests shall be considered final.		06/28/2021
Successful proposer commences service		06/29/2021

2) **Project Development (Major Milestones).**

Notice to Proceed	Upon Contract Execution
Project Start-Up/Mobilization	Immediately Upon Execution
All Tasks Completed	12/31/2021

X. Evaluation and Selection Process

Selection Committee. The City of Fargo will establish a selection committee to determine which firm, by its determination, has the best skills and approach to complete the project. The City of Fargo will not disclose the membership of the selection committee prior to the firm interviews.

The firm selection process shall be administered under the following criteria:

- 20% The firm's past experience with similar projects, including the firm's ability, familiarity, and involvement in handling similar types of activities
- 20% Specific qualifications of the firm's project manager and key staff's experience related to the development of similar studies
- 20% The firm's project understanding, proposed project approach and methodology, project work plan, and project management techniques
- 20% The firm's record of past performance on similar projects, including quality of work, ability to meet deadlines, and ability to control costs
- 20% Current workload and the availability of key personnel and other resources to perform the work within the specified timeframe

The selection committee, at the discretion of the City of Fargo and under the guidance of NDDOT policy, will entertain formal oral presentations for the top candidates to provide additional input into the evaluation process. Oral presentations will be followed by a question and answer period during which the selection committee may question the prospective consultants about their proposed approaches.

The City of Fargo reserves the right to reject any or all proposals or to waive minor irregularities in said proposal, and reserves the right to negotiate minor deviations to the proposal with the successful firm. The City of Fargo reserves the right to award a contract to the consulting firm or individual that presents the proposal, which, in the sole judgement of the City of Fargo, best accomplishes the desired results.

This RFQ does not commit the City of Fargo award a contract, to pay any costs incurred in the preparation of a response to this request, or to procure or contract for any services or supplies, the City of Fargo reserves the right to withdraw this RFQ at any time without prior notice.

All proposals, whether selected or rejected, shall become the property of the City of Fargo.

> **Prohibited Contact with Proposers**: Except as otherwise provided, oral communications between Evaluators and Proposers regarding procurement in progress is prohibited. Each Evaluation Panel member shall report any such communication, in writing to the RFP Administrators, who shall determine, in consultation with the Fargo City Administrator, any appropriate remedial action.

XI. Proposal Content and Format

The purpose of the proposal is to demonstrate the qualifications, competence, and capacity of the consultant seeking to provide comprehensive services specified herein for the City of Fargo, in conformity with the requirements of the RFQ. The proposal should demonstrate qualifications of the firm and its staff to undertake this project. It should also specify the proposed approach that best meets the RFQ requirements. The proposal must address each of the service specifications under the Scope of Work and Performance Tasks.

At minimum, proposals shall include the following information:

1) **Contact Information**. Name, telephone number, email address, mailing address, and other contact information for the consultant's project manager.

2) **Introduction and Executive Summary.** This section shall document the firm name, business address (including telephone, email address(es), year established, type of ownership and parent company (if any), project manager name and qualifications, and any major features that may differentiate this proposal form others, if any.

3) **Work Plan and Project Approach Methodology.** Proposals shall include the following, at minimum:

    a. A detailed work plan identifying the major tasks to be accomplished relative to the requested study tasks and expected product as outlined in this RFQ. A timeline for completion of the requested services, identifying milestones for development of the project and completion of individual tasks.
    b. List of projects of similar size, scope, type, and complexity that the proposed project team has successfully completed in the past.
    c. List of the proposed principal(s) who will be responsible for the work, proposed project manager and project team members (with resumes).
    d. A breakout of hours for each member of the team by major task area, and an overall indication of the level of effort (percentage of overall project team hours) allocated to each task. Note that specific budget information is to be submitted in a sealed cost proposal as described below in Section VIII. General Proposal Requirements
    e. A list of any subcontracted agencies, the tasks they will be assigned, the percent of work to be performed, and the staff that will be assigned.
    f. List of client references for similar projects described within the RFP.
    g. Required Disadvantaged Business Enterprise (DBE) and/or Minority Business Enterprise (MBE) Firms participation documentation, if applicable.
    h. Ability of firm to meet required time schedules based on current and known future workload of the staff assigned to the project.

4) **Signature.** Proposals shall be signed in ink by an authorized member of the firm/project team.

5) **Attachments.** Review, complete, and submit the completed versions of the following RFQ Attachments with the proposal:

Exhibit A – Cost Proposal Form
Exhibit B – Debarment and Suspension Certification
Exhibit C – Lobbying Restrictions Certification
Exhibit D – Standard Form 330
Exhibit E – Stertil-Koni Site Specific Drawings

XII. Submittal Information

Hard copies of technical and/or cost proposals should be delivered to the contact below:

Jordan Smith	Julie Bommelman
Transit Fleet and Facilities Manager	City of Fargo Transit Director
650 23rd St N	650 23rd St N
Fargo ND, 58102	Fargo ND, 58102
jmsmith@fargond.gov	jbommelman@fargond.gov

All proposals received by **2:00 pm on Wednesday, April 21st, 2021** at the MATBUS office listed above, will be given equal consideration. Minority, women-owned and disadvantaged business enterprises are encouraged to participate. Respondents must submit six (6) hard copies and one (1) PDF copy of the proposal.

The City of Fargo will hold a preproposal meeting on **Thursday, April 8th at 1:00 pm in MTG conference room (650 23rd St N. Fargo ND, 58102)**, where consultants may attend and ask any questions they may have about the intent of the RFQ. The City of Fargo staff will be present at this meeting to give insight into the intricacies of the project. Upon request, the City of Fargo will provide a conference hotline to consultants who cannot be at the meeting in person. No response will be given to verbal or written questions prior to this meeting. Questions from bidders will be submitted at the meeting and we will respond in writing by April 16th, 2021. The City of Fargo reserves the right to decline a response to any question if, in the City of Fargo assessment, the information cannot be obtained and shared with all potential firms in a timely manner. A summary of the preproposal meeting will be posted on the City of Fargo and MATBUS website before proposals are due.

XIII. General RFQ Requirements

1) **Sealed Cost Proposal.** All proposals must be clearly identified and marked with the appropriate project name, with a separately sealed cost proposal per the requirements of this RFQ. Cost proposals shall be based on an hourly "not to exceed" amount and shall follow the general format as provided within Exhibit A of this RFQ. The City of Fargo may decide, in its sole discretion, to negotiate a price for the project after the selection committee completes its final ranking. Negotiation will begin with the consultant identified as the most qualified per requirements of this RFQ, as determined in the evaluation/selection process. If the City of Fargo is unable to negotiate a contract for services, negotiations will be terminated and negotiations will begin with the next most qualified consultant. This process shall continue until a satisfactory contract has been negotiated.

2) **Consultant Annual Audit Information for Indirect Cost.** Consulting firms proposing to do work for the City of Fargo must have a current audit rate no older than fifteen (15) months

from the close of the firms Fiscal Year. Documentation of this audit rate must be provided with the sealed cost proposal. Firms that do not meet this requirement will not qualify to propose or contract for the City of Fargo projects until the requirement is met. Firms that have submitted all the necessary information to the City of Fargo and are waiting for the completion of the audit will be qualified to submit proposals for work. Information submitted by a firm that is incomplete will not qualify. Firms that do not have a current cognizant Federal Acquisition Regulations (FARs) audit of indirect cost rates must provide this audit prior to the interview. **This document must be attached with the sealed cost proposal.**

3) **Debarment and Suspension Certification and Certification of Restriction on Lobbying.** Respondents must attach signed copies of Exhibit B – Debarment and Suspension Certification and Exhibit C – Certification of Restriction on Lobbying attached to the exterior of the sealed cost proposal, as well as Exhibit D – Standard Form 330 (if required).

4) **Respondent Qualifications.** Respondents must submit evidence that they have relevant past experience and have previously delivered services similar to the requested services within this RFP. Each respondent may also be required to show that similar work has been performed in a satisfactory manner and that no claims of any kind are pending against such work. No proposal will be accepted from a respondent whom is engaged in any work that would impair his/her ability to perform or finance this work.

5) **Disadvantaged Business Enterprise.** Pursuant to U.S. Department of Transportation policy and 49 CFR Part 26, the City of Fargo supports the participation of DBE/MBE businesses in the performance of contracts financed with federal funds under this RFQ. Consultants shall make an effort to involve DBE/MBE businesses in this project. If the consultant is a DBE/MBE, a statement indicating that the business is certified DBE/MBE in North Dakota or Minnesota shall be included within the proposal. If the consultant intends to utilize a DBE/MBE to complete a portion of this work, a statement of the subcontractor's certification shall be included. The percent of the total proposed cost to be completed by the DBE/MBE shall be shown within the proposal. Respondents should substantiate (within proposal) efforts made to include DBE/MBE businesses.

6) **North Dakota Department of Transportation Consultant Administration Services Procedure Manual.** Consultants are advised to follow procedures contained in the *North Dakota Department of Transportation Consultant Administration Services Procedure Manua*l, which includes pre-qualifications of consultants. Copies of the manual may be found on the NDDOT website at www.dot.nd.gov.

XIV. Additional Information

A list of additional reference documents and information may be made available for consultants upon request.

XV. Contractual Information

1) The City of Fargo reserves the right to reject any or all proposals or to award the contract to the next most qualified consulting firm if the successful firm does not execute a contract within forty-five (45) days after the award of the proposal. The City of Fargo shall not pay for any information contained in proposals obtained from participating firms.

2) The City of Fargo reserves the right to request clarification on any information submitted and additionally reserves the right to request additional information of one (1) or more applicants.

3) Any proposal may be withdrawn up until the proposal submission deadline. Any proposals not withdrawn shall constitute an irrevocable offer for services set forth within the RFQ for a period of ninety (90) days or until one or more of the proposals have been approved by the City of Fargo Commission.

4) If, through any cause, the consultant shall fail to fulfill in a timely and proper manner the obligations agreed to, the City of Fargo shall have the right to terminate its contract by specifying the date of termination in a written notice to the firm at least ninety (90) working days before the termination date. In this event, the firm shall be entitled to just and equitable compensation for any satisfactory work completed.

5) Any agreement or contract resulting from the acceptance of a proposal shall be on forms either supplied by or approved by the City of Fargo and shall contain, as a minimum, applicable provisions of the RFQ. The City of Fargo reserves the right to reject any agreement that does not conform to the RFQ and any the City of Fargo requirements for agreements and contracts.

6) The consultant shall not assign any interest in the contract and shall not transfer any interest in the same without prior written consent of the City of Fargo.

XVI. Payments

The selected firm shall submit invoices for work completed to the City of Fargo. Payments shall be made to the consultant by the City of Fargo in accordance with the contract after all required services, as well as items identified in the scope of work and performance tasks, have been completed to the satisfaction of the City of Fargo.

XVII. Federal and State Funds

A portion of this project will be grant funded through the Federal Transit Administration (FTA) 5339 (Bus and Bus Facilities) program; and the City of Fargo Enterprise Fund. Therefore, Local, federal and state requirements and corresponding contract clauses will apply to this project and any resulting contractual arrangement.

XVIII. Title VI Assurances

Prospective firms should be aware of the following contractual requirements regarding compliance with Title VI should they be selected pursuant to this RFQ:

1) **Compliance with Regulations.** The firm shall comply with the regulations relative to nondiscrimination in federally-assisted programs of the U.S. Department of Transportation, 49 CFR Part 21, as they may be amended from time to time (hereinafter referred to as the Regulations).

2) **Nondiscrimination.** The firm, with regard to the work performed by it, shall not discriminate on the grounds of race, color, national origin, sex, age, disability/handicap, or income status**, in the selection and retention of subcontractors, including procurements of materials and leases of equipment. The firm shall not participate, either directly or indirectly, in the discrimination prohibited by Section 21.5 of the Regulations, including employment practices when the contract covers a program set forth in Appendix B of the Regulations.

3) **Solicitations for Subcontracts, Including Procurements of Materials and Equipment.** In all solicitations, either by competitive bidding or negotiation, made by the firm for work to be performed under a subcontract, including procurements of materials or leases of equipment, each potential subcontractor or supplier shall be notified by the consultant of the contractor's obligations to the City of Fargo and the regulations relative to nondiscrimination on the grounds of race, color, national origin, sex, age, disability/handicap, or income status**.

4) **Information and Reports.** The firm shall provide all information and reports required by the Regulations, or directives issued pursuant thereto, and shall permit access to its books, records, accounts, other sources of information and its facilities as may be determined by the City of Fargo or NDDOT to be pertinent to ascertain compliance with such Regulations, orders, and instructions. Where any information required of a firm is in the exclusive possession of another who fails or refuses to furnish this information, the consultant shall so certify to the City of Fargo, or NDDOT, as appropriate, and shall set forth what efforts it has made to obtain the information.

5) **Sanctions for Noncompliance.** In the event of the consultant's noncompliance with the nondiscrimination provisions as outlined herein, the City of Fargo and NDDOT shall impose such sanctions as it or FTA may determine to be appropriate, including but not limited to:

    a) Withholding of payments to the firm under the contract until the firm complies, and/or;

    b) Cancellation, termination, or suspensions of the contract, in part or in whole.

6) **Incorporation of Title VI Provisions.** The firm shall include the provisions of Section XIII, paragraphs 1 through 5 in every subcontract, including procurements of materials and leases of equipment, unless exempt by the Regulations or directives issued pursuant thereto.

The firm shall take such action with respect to any subcontract or procurement as the City of Fargo, the U.S. Department of Transportation, or FTA may direct as a means of enforcing such provisions, including sanctions for noncompliance provided, however, that in the event a consultant becomes involved in, or is threatened with, litigation by a subcontractor or supplier as a result of such direction, the firm may request the City of Fargo enter into such litigation to protect the interests of the City of Fargo; and, in addition, the firm may request the United States to enter into such litigation to protect the interests of the United States.

** The Act governs race, color, and national origin. Related Nondiscrimination Authorities

govern sex, 23 USC 324; age, 42 USC 6101; disability/handicap, 29 USC 790; and low income, EO 12898.

XIX. Termination Provisions

The City of Fargo reserves the right to cancel any contract for cause upon written notice to the firm. Cause for cancellation will be documented failure(s) of the firm to provide services in the quantity or quality required. Notice of such cancellation will be given with sufficient time to allow for the orderly withdrawal of the firm without additional harm to the participants or the City of Fargo.

The City of Fargo may cancel or reduce the amount of service to be rendered if there is, in the opinion of the City of Fargo, a significant increase in local costs; or if there is insufficient state or federal funding available for the service; thereby terminating the contract or reducing the compensation to be paid under the contract. In such event, the City of Fargo will notify the firm in writing ninety (90) days in advance of the date such actions are to be implemented.

In the event of any termination, the City of Fargo shall pay the agreed rate only for services delivered up to the date of termination. The City of Fargo has no obligation to the firm, of any kind, after the date of termination. The firm shall deliver all records, equipment, and materials to the City of Fargo within twenty-four (24) hours of the date of termination.

XX. Limitation on Firm

All reports and pertinent data or materials are the sole property of the City of Fargo and may not be used, reproduced, or released in any form without the explicit, written permission of the City of Fargo.

The firm should expect to have access only to the public reports and public files of local governmental agencies and the City of Fargo in preparing the proposal or reports. No compilation, tabulation or analysis of data, definition of opinion, etc., should be anticipated by the consultant from these agencies, unless volunteered by a responsible official in those agencies.

XXI. Conflict of Interest

No consultant, subcontractor, or member of any firm proposed to be employed in the preparation of this proposal shall have a past, ongoing, or potential involvement which could be deemed a conflict of interest under North Dakota Century Code or other law. During the term of this agreement, the firm shall not accept any employment or engage in any consulting work that would create a conflict of interest with the City of Fargo or in any way compromise the services to be performed under this agreement. The firm shall immediately notify the City of Fargo of any and all potential violations of this paragraph upon becoming aware of the potential violation.

XXII. Insurance

The firm shall provide evidence of insurance as stated in the contract prior to execution of the contract.

XXIII. Risk Management

The firm agrees to defend, indemnify, and hold harmless the City of Fargo and the State of North Dakota, its agencies, officers and employees, from and against claims based on the vicarious liability of CITY OF FARGO and the State or its agents, but not against claims based on CITY OF FARGO and the State's contributory negligence, comparative and/or contributory negligence or fault, sole negligence, or intentional misconduct. The legal defense provided by the firm to CITY OF FARGO and the State under this provision must be free of any conflicts of interest, even if retention of separate legal counsel for CITY OF FARGO and the State is necessary. The firm also agrees to defend, indemnify, and hold CITY OF FARGO and the State harmless for all costs, expenses and attorneys' fees incurred if CITY OF FARGO or the State prevails in an action against the consultant in establishing and litigating the indemnification coverage provided herein. This obligation shall continue after the termination of the contract.

The firm shall secure and keep in force during the term of the contract, from insurance companies, government self-insurance pools or government self-retention funds authorized to do business in North Dakota, the following insurance coverage:

1) Commercial general liability and automobile liability insurance - minimum limits of liability required are $250,000 per person and $1,000,000 per occurrence.

2) Workforce Safety insurance meeting all statutory limits.

3) The City of Fargo and the State of North Dakota, its agencies, officers, and employees shall be endorsed as an additional insured on the commercial general liability and automobile liability policies.

4) Said endorsements shall contain a "Waiver of Subrogation" in favor of the City of Fargo and the State of North Dakota.

5) The policies and endorsements may not be canceled or modified without thirty (30) days prior written notice to the City of Fargo and the State Risk Management Department.

The firm shall furnish a certificate of insurance evidencing the requirements in 1, 3, and 4, above to the City of Fargo prior to commencement of this agreement.

The City of Fargo and the State reserve the right to obtain complete, certified copies of all required insurance documents, policies, or endorsements at any time. Any attorney who represents the State under this contract must first qualify as and be appointed by the North Dakota Attorney General as a Special Assistant Attorney General as required under North Dakota Century Code Section 54-12-08.

When a portion of the work under the agreement is sublet, the consultant shall obtain

insurance protection (as outlined above) to provide liability coverage to protect the consultant, the City of Fargo, and the State as a result of work undertaken by the subconsultant. In addition, the firm shall ensure that any and all parties performing work under the agreement are covered by public liability insurance as outlined above. All subconsultants performing work under the agreement are required to maintain the same scope of insurance required of the consultant. The firm shall be held responsible for ensuring compliance with those requirements by all subconsultants.

Firm's insurance coverage shall be primary (i.e., pay first) as respects any insurance, self-insurance or self-retention maintained by the City of Fargo or the State of North Dakota. Any insurance, self-insurance or self-retention maintained by the City of Fargo or the State shall be excess of the firms insurance and shall not contribute with it. The insolvency or bankruptcy of the insured firm shall not release the insurer from payment under the policy, even when such insolvency or bankruptcy prevents the insured firm from meeting the retention limit under the policy. Any deductible amount or other obligations under the policy(ies) shall be the sole responsibility of the firm. This insurance may be in a policy or policies of insurance, primary and excess, including the so-called umbrella or catastrophe form and be placed with insurers rated "A-" or better by A.M. Best Company, Inc. the City of Fargo and the State will be indemnified, saved, and held harmless to the full extent of any coverage actually secured by the firm in excess of the minimum requirements set forth above.

XXIV. Federal Clauses

By entering into a sale with the City of Fargo, ND, and/or the City of Moorhead, MN, doing business as CITY OF FARGO, the supplier is agreeing to be bound by the following federal clauses and certifications as applicable:

_____ 1. **No Government Obligation to Third Parties:** *Applies to all third party contracts that are federally funded.*

a) The Purchaser and Contractor acknowledge and agree that, notwithstanding any concurrence by the Federal Government in or approval of the solicitation or award of the underlying contract, absent the express written consent by the Federal Government, the Federal Government is not a party to this contract and shall not be subject to any obligations or liabilities to the Purchaser, Contractor, or any other party (whether or not a party to that contract) pertaining to any matter resulting from the underlying contract.

b) The Contractor agrees to include the above clause in each subcontract financed in whole or in part with Federal assistance provided by the FTA. It is further agreed that the clause shall not be modified, except to identify the subcontractor who will be subject to its provisions.

_____ 2. **Program Fraud & False or Fraudulent Statements & Related Acts:** *Applies to all third party contracts that are federally funded.*

a) The Contractor acknowledges that the provisions of the Program Fraud Civil Remedies Act of 1986, as amended, 31 U.S.C. 3801 et seq. and U.S. DOT regulations, "Program Fraud Civil Remedies," 49 C.F.R. Part 31, apply to its actions pertaining to this Project. Upon execution of the underlying contract, the Contractor certifies or affirms the truthfulness and accuracy of any statement it has made, it makes, it may make, or causes to be made, pertaining to the underlying contract or the FTA assisted project for which this contract work is being performed. In addition to other penalties that may be applicable, the Contractor further acknowledges that if it makes, or causes to be made, a false, fictitious, or fraudulent claim, statement, submission or certification, the Federal Government reserves the right to impose the penalties of the Program Fraud Civil Remedies Act of 1986 on the Contractor to the extent the Federal Government deems appropriate.

b) The Contractor also acknowledges that if it makes, or causes to be made, a false, fictitious, or fraudulent claim, statement, submission, or certification to the Federal Government under a contract connected with a project that is financed in whole or in part with Federal assistance originally awarded by FTA under the authority of 49 U.S.C. chapter 53, the Government reserves the right to impose the penalties of 18 U.S.C. § 1001 and 49 U.S.C. § 5323(1) on the Contractor, to the extent the Federal Government deems appropriate.

c) The Contractor agrees to include the above two clauses in each subcontract financed in whole or in part with Federal assistance provided by FTA. It is further agreed that the clauses shall not be modified, except to identify the subcontractor who will be subject to the provisions.

X 3. **Access to Records and Reports:** *Applies to all contracts funded in whole or in part with FTA funds.*

a) Record Retention. The Contractor will retain, and will require its subcontractors of all tiers to retain, complete and readily accessible records related in whole or in part to the contract, including, but not limited to, data, documents, reports, statistics, sub-agreements, leases, subcontracts, arrangements, other third party agreements of any type, and supporting materials related to those records.

b) Retention Period. The Contractor agrees to comply with the record retention requirements in accordance with 2 C.F.R. § 200.333. The Contractor shall maintain all books, records, accounts and reports required under this Contract for a period of at not less than three (3) years after the date of termination or expiration of this Contract, except in the event of litigation or settlement of claims arising from the performance of this Contract, in which case records shall be maintained until the disposition of all such litigation, appeals, claims or exceptions related thereto.

c) Access to Records. The Contractor agrees to provide sufficient access to FTA and its contractors to inspect and audit records and information related to performance of this contract as reasonably may be required.

d) Access to the Sites of Performance. The Contractor agrees to permit FTA and its contractors access to the sites of performance under this contract as reasonably may be required.

☒ 4. **Federal Changes:** *Applies to all contracts.*
Contractor shall at all times comply with all applicable FTA regulations, policies, procedures and directives, including without limitation those listed directly or by reference in the Master Agreement between Purchaser and FTA, and they may be amended or promulgated from time to time during the term of this contract. Contractor's failure to so comply shall constitute a material breach of this contract.

☒ 5. **Civil Rights and Equal Opportunity:** *Applies to all contracts.*
The AGENCY is an Equal Opportunity Employer. As such, the AGENCY agrees to comply with all applicable Federal civil rights laws and implementing regulations. Apart from inconsistent requirements imposed by Federal laws or regulations, the AGENCY agrees to comply with the requirements of 49 U.S.C. § 5323(h) (3) by not using any Federal assistance awarded by FTA to support procurements using exclusionary or discriminatory specifications.

Under this Agreement, the Contractor shall at all times comply with the following requirements and shall include these requirements in each subcontract entered into as part thereof.

a) Nondiscrimination. In accordance with Federal transit law at 49 U.S.C. § 5332, the Contractor agrees that it will not discriminate against any employee or applicant for employment because of race, color, religion, national origin, sex, disability, or age. In addition, the Contractor agrees to comply with applicable Federal implementing regulations and other implementing requirements FTA may issue.

b) Race, Color, Religion, National Origin, Sex. In accordance with Title VII of the Civil Rights Act, as amended, 42 U.S.C. § 2000e et seq., and Federal transit laws at 49 U.S.C. § 5332, the Contractor agrees to comply with all applicable equal employment opportunity requirements of U.S. Department of Labor (U.S. DOL) regulations, "Office of Federal Contract Compliance Programs, Equal Employment Opportunity, Department of Labor," 41 C.F.R. chapter 60, and Executive Order No. 11246, "Equal Employment Opportunity in Federal Employment," September 24, 1965, 42 U.S.C. § 2000e note, as amended by any later Executive Order that amends or supersedes it, referenced in 42 U.S.C. § 2000e note. The Contractor agrees to take affirmative action to ensure that applicants are employed, and that employees are treated during employment, without regard to their race, color, religion, national origin, or sex (including sexual orientation and gender identity). Such action shall include, but not be limited to, the following: employment, promotion, demotion or transfer, recruitment or recruitment advertising, layoff or termination; rates of pay or other forms of compensation; and selection for training, including

apprenticeship. In addition, the Contractor agrees to comply with any implementing requirements FTA may issue.

c) Age. In accordance with the Age Discrimination in Employment Act, 29 U.S.C. §§ 621-634, U.S. Equal Employment Opportunity Commission (U.S. EEOC) regulations, "Age Discrimination in Employment Act," 29 C.F.R. part 1625, the Age Discrimination Act of 1975, as amended, 42 U.S.C. § 6101 *et seq*., U.S. Health and Human Services regulations, "Nondiscrimination on the Basis of Age in Programs or Activities Receiving Federal Financial Assistance," 45 C.F.R. part 90, and Federal transit law at 49 U.S.C. § 5332, the Contractor agrees to refrain from discrimination against present and prospective employees for reason of age. In addition, the Contractor agrees to comply with any implementing requirements FTA may issue.

d) Disabilities. In accordance with section 504 of the Rehabilitation Act of 1973, as amended, 29 U.S.C. § 794, the Americans with Disabilities Act of 1990, as amended, 42 U.S.C. § 12101 *et seq*., the Architectural Barriers Act of 1968, as amended, 42 U.S.C. § 4151 *et seq*., and Federal transit law at 49 U.S.C. § 5332, the Contractor agrees that it will not discriminate against individuals on the basis of disability. In addition, the Contractor agrees to comply with any implementing requirements FTA may issue.

_X_ 6. **Termination Provisions:** *Applies to all contracts in excess of $10,000. Those contracts must address termination for cause and for convenience, including the manner by which it will be effected and the basis for settlement.*

a) The CITY reserves the right to cancel any contract for cause upon written notice to the Contractor. Cause for cancellation will be documented failure(s) of the contractor to provide services in the quantity and/or quality required. Notice of such cancellation will be given with sufficient time to allow for the orderly withdrawal of the Contractor without additional harm to the participants or the CITY.

b) The CITY may cancel or reduce the amount of service to be rendered if there is, in the opinion of the City Council, a significant increase in local costs; or, in the opinion of the City Council, insufficient state or federal funding available for the service, thereby terminating the contract or reducing the compensation to be paid under the contract. In such event, the CITY will notify Contractor in writing ninety (90) days in advance of the date such actions are to be implemented.

CONTRACTOR is hereby notified that the CITY Transit system pursuant to this agreement is dependent upon the necessary receipt of local, state and federal funding.

In the event of any termination, the CITY shall pay the agreed rate only for services delivered up to the date of termination. The CITY has no obligation to Contractor, of any kind, after the date of termination. Contractor shall deliver all

records, equipment and materials to the CITY within 24 hours of the date of termination.

☒ 7. **Disadvantaged and Small Business Enterprise:** *Applies to FTA recipients receiving planning, capital and/or operating assistance that will award prime contracts (excluding transit vehicle purchases) exceeding $250,000 in FTA funds in a Federal fiscal year.*

For all DOT-assisted contracts, each FTA recipient must include assurances that third party contractors will comply with the DBE program requirements of 49 C.F.R. part 26, when applicable. The following contract clause is required in all DOT-assisted prime and subcontracts:

The contractor, subrecipient or subcontractor shall not discriminate on the basis of race, color, national origin, or sex in the performance of this contract. The contractor shall carry out applicable requirements of 49 C.F.R. part 26 in the award and administration of DOT-assisted contracts. Failure by the contractor to carry out these requirements is a material breach of this contract, which may result in the termination of this contract or such other remedy as the recipient deems appropriate, which may include, but is not limited to:

a) Withholding monthly progress payments;
b) Assessing sanctions;
c) Liquidated damages; and/or
d) Disqualifying the contractor from future bidding as non-responsible. 49 C.F.R. § 26.13(b).

Further, recipients must establish a contract clause to require prime contractors to pay subcontractors for satisfactory performance of their contracts no later than 30 days (payment required within10 days or paying interest at 1 ½ percent per Minnesota State Statute 471.425 subd. 4a) from receipt of each payment the recipient makes to the prime contractor. 49 C.F.R. § 26.29(a). Finally, for contracts with defined DBE contract goals, each FTA recipient must include in each prime contract a provision stating that the contractor shall utilize the specific DBEs listed unless the contractor obtains the recipient's written consent; and that, unless the recipient's consent is provided, the contractor shall not be entitled to any payment for work or material unless it is performed or supplied by the listed DBE. 49 C.F.R. § 26.53(f) (1).

In connection with the performance of this service, the Contractor will cooperate with the CITY in the utilization of disadvantaged business enterprises including women-owned business enterprises for the duration of the contract and will use its best efforts to insure that disadvantaged business enterprises have the maximum practicable opportunity to compete for subcontract work. In order to insure that a fair proportion of the purchases of supplies and services is placed with disadvantaged business enterprises, the Contractor agrees to take affirmative action to identify disadvantaged business firms, solicit bids or quotations from them for supplies and services related to this proposal.

The Contractor agrees to meet any goals established by CITY for purchases pertaining to this Contract to the best of the Contractor's ability and will provide

the CITY with the necessary certification and records for reporting purposes. When the majority of the contract is labor, which is not a contracting opportunity, DBE goals will not be set but Contractors are encouraged to use DBE businesses.

The CONTRACTOR will be required to report its DBE participation obtained through race-neutral means throughout the period of performance.

The contractor must promptly notify the CITY whenever a DBE subcontractor performing work related to this contract is terminated or fails to complete its work, and must make good faith efforts to engage another DBE subcontractor to perform at least the same amount of work. The contractor may not terminate any DBE subcontractor and perform that work through its own forces or those of an affiliate without prior written consent of the CITY.

Fostering Small Business Participation
The CITY has established a small business element to its DBE program, pursuant to 49 CFR 26.39. This program aims to provide opportunities and foster small business enterprises (SBE)/participation in contracting with the CITY. This program is race- and gender- neutral, however SBEs can also count towards DBE goals.

_X_ 8. **Incorporation of FTA Terms:** *Applies to all contracts.*
The preceding provision includes, in part, certain Standard Terms and Conditions required by DOT, whether or not expressly set forth in the preceding contract provisions. All contractual provisions required by DOT, as set forth in FTA Circular 4220.1 as amended, are hereby incorporated by reference. Anything to the contrary herein notwithstanding, all FTA mandated terms shall be deemed to control in the event of a conflict with other provisions contained in this Agreement. The Contractor shall not perform any act, fail to perform any act, or refuse to comply with any CITY requests which would cause the CITY to be in violation of the FTA terms and conditions.

_X_ 9. **Debarment, Suspension, Ineligibility and Voluntary Exclusion:** *Applies to contracts in an amount expected to equal or exceed $25,000 or a contract award at any tier for a federally required audit (irrespective of the contract amount) must not be made to parties listed on the government-wide exclusions in the System for Award Management (SAM), in accordance with the OMB guidelines at 2 C.F.R. part 180. Recipients, contractors, and subcontractors (at any level) that enter into covered transactions are required to verify that the entity (as well as its principals and affiliates) with which they propose to contract or subcontract is not excluded or disqualified. This is done by: (a) checking the SAM exclusions; (b) collecting a certification from that person; or (c) adding a clause or condition to the contract or subcontract.*

The Contractor shall comply and facilitate compliance with U.S. DOT regulations, “Nonprocurement Suspension and Debarment,” 2 C.F.R. part 1200, which adopts and supplements the U.S. Office of Management and Budget (U.S. OMB) “Guidelines to Agencies on Governmentwide Debarment and Suspension

(Nonprocurement)," 2 C.F.R. part 180. These provisions apply to each contract at any tier of $25,000 or more, and to each contract at any tier for a federally required audit (irrespective of the contract amount), and to each contract at any tier that must be approved by an FTA official irrespective of the contract amount. As such, the Contractor shall verify that its principals, affiliates, and subcontractors are eligible to participate in this federally funded contract and are not presently declared by any Federal department or agency to be:

a) Debarred from participation in any federally assisted Award;

b) Suspended from participation in any federally assisted Award;

c) Proposed for debarment from participation in any federally assisted Award;

d) Declared ineligible to participate in any federally assisted Award;

e) Voluntarily excluded from participation in any federally assisted Award; or

f) Disqualified from participation in any federally assisted Award.

By signing and submitting its bid or proposal, the bidder or proposer certifies as follows:
The certification in this clause is a material representation of fact relied upon by the City of Fargo. If it is later determined by the City of Fargo that the bidder or proposer knowingly rendered an erroneous certification, in addition to remedies available to the City of Fargo, the Federal Government may pursue available remedies, including but not limited to suspension and/or debarment. The bidder or proposer agrees to comply with the requirements of 2 C.F.R. part 180, subpart C, as supplemented by 2 C.F.R. part 1200, while this offer is valid and throughout the period of any contract that may arise from this offer. The bidder or proposer further agrees to include a provision requiring such compliance in its lower tier covered transactions.

_____ 10. **Buy America:** *Applies to projects that involve the purchase of more than $150,000 of iron, steel, manufactured goods, or rolling stock to be delivered to the recipient to be used in an FTA assisted project.*

The contractor agrees to comply with 49 U.S.C. 5323(j) and 49 C.F.R. part 661, which provide that Federal funds may not be obligated unless all steel, iron, and manufactured products used in FTA funded projects are produced in the United States, unless a waiver has been granted by FTA or the product is subject to a general waiver. General waivers are listed in 49 C.F.R. § 661.7. Separate requirements for rolling stock are set out at 49 U.S.C. 5323(j)(2)(C) and 49 C.F.R. § 661.11.

_____ 11. **Breach of Contract and Dispute Resolution:** *Applies to all contracts in excess of the Simplified Acquisition Threshold (currently set at $150,000) and those contracts shall contain administrative, contractual, or legal remedies in instances where contractors violate or breach contract terms, and provide for such sanctions and penalties as appropriate.*

a) Disputes will be presented in writing to the appropriate City personnel – the Fargo Transit Director. City personnel and the Contractor will attempt to resolve any dispute arising in the performance of the Contract.

   Fargo: If the Transit Director and Contractor cannot resolve the dispute, the issue will be presented in writing to the Assistant Fargo City Administrator within ten [10] working days of dispute. If the dispute cannot be resolved by the Assistant City Administrator, it will be submitted in writing within ten [10] working days of the Fargo City Administrator's decision to the Fargo City Commission – it is the sole responsibility of the Contractor to schedule a hearing with the Fargo City Commission. In connection with any such appeal, the Contractor shall be afforded an opportunity to be heard and to offer evidence in support of its position at the hearing.

   <u>The decision of the Fargo City Commission shall be binding upon the Contractor and the Contractor shall abide by the decision.</u>

b) Unless otherwise directed by the City of Fargo, Contractor shall continue performance under this Contract while matters in dispute are being resolved.
c) Should either party to the Contract suffer injury or damage to person or property because of any act or omission of the party or of any of his employees, agents or others for whose acts he is legally liable, a claim for damages therefore shall be made in writing to such other party within a reasonable time after the first observance of such injury of damage.
d) Unless this contract provides otherwise, all claims, counterclaims, disputes and other matters in question between the City of Fargo and the Contractor arising out of or relating to this agreement or its breach will be decided by arbitration if the parties mutually agree, or in a court of competent jurisdiction within the applicable state.

_X__ 12. **<u>Lobbying Restrictions:</u>** *Applies to all contracts and subcontracts of $100,000 or more at any tier under a Federal grant. If any funds other than Federal appropriated funds have been paid or will be paid to any person for influencing or attempting to influence an officer or employee of any agency, a Member of Congress, an officer or employee of Congress, or an employee of a Member of Congress in connection with this agreement, the payor must complete and submit the Standard Form-LLL, "Disclosure Form to Report Lobbying," in accordance with its instructions.*

49 C.F.R. part 20, Appendices A and B provide specific language for inclusion in FTA funded third party contracts as follows:

The undersigned certifies *(Note: A separate certification will be required to be signed if the contract meets this criteria),* to the best of his or her knowledge and belief, that:

a) No Federal appropriated funds have been paid or will be paid, by or on behalf of the undersigned, to any person for influencing or attempting to

influence an officer or employee of an agency, a Member of Congress, an officer or employee of Congress, or an employee of a Member of Congress in connection with the awarding of any Federal contract, the making of any Federal grant, the making of any Federal loan, the entering into of any cooperative agreement, and the extension, continuation, renewal, amendment, or modification of any Federal contract, grant, loan, or cooperative agreement.

b) If any funds other than Federal appropriated funds have been paid or will be paid to any person for influencing or attempting to influence an officer or employee of any agency, a Member of Congress, an officer or employee of Congress, or an employee of a Member of Congress in connection with this Federal contract, grant, loan, or cooperative agreement, the undersigned shall complete and submit Standard Form-LLL, "Disclosure Form to Report Lobbying," in accordance with its instructions.

c) The undersigned shall require that the language of this certification be included in the award documents for all sub-awards at all tiers (including subcontracts, sub-grants, and contracts under grants, loans, and cooperative agreements) and that all subrecipients shall certify and disclose accordingly.

This certification is a material representation of fact upon which reliance was placed when this transaction was made or entered into. Submission of this certification is a prerequisite for making or entering into this transaction imposed by section 1352, title 31, U.S. Code. Any person who fails to file the required certification shall be subject to a civil penalty of not less than $10,000 and not more than $100,000 for each such failure.

_____ 13. **Clean Air and Federal Water Pollution Control Act:** *Applies to each contract and subcontract exceeding $150,000. The Clean Air Act and Federal Water Pollution Control Act requirements extend to all third party contractors and their contracts at every tier and subrecipients and their subcontracts at every tier.*

The Contractor agrees:

a) It will not use any violating facilities;
b) It will report the use of facilities placed on or likely to be placed on the U.S. EPA "List of Violating Facilities;"
c) It will report violations of use of prohibited facilities to FTA; and
d) It will comply with the inspection and other requirements of the Clean Air Act, as amended, (42 U.S.C. §§ 7401 – 7671q); and the Federal Water Pollution Control Act as amended, (33 U.S.C. §§ 1251-1387).

_____ 14. **Contract Work Hours & Safety Standards Act:** *Applies to all FTA funded contracts in excess of $100,000 that involve the employment of mechanics or laborers.*
Certain employee protections apply to all FTA funded contracts with particular emphasis on construction related projects. The recipient will ensure that each third party contractor complies with all federal laws, regulations, and requirements, including:

a) Contract Work Hours and Safety Standards

i. Contract Work Hours and Safety Standards Act, as amended, 40 U.S.C. §§ 3701-3708; and supplemented by Department of Labor (DOL) regulations, 29 C.F.R. part 5; and A-38

ii. U.S. DOL regulations, "Safety and Health Regulations for Construction," 29 C.F.R. part 1926.

a) For construction contracts:

i. For all contracts in excess of $100,000 that involve the employment of mechanics or laborers, the Contractor shall comply with the Contract Work Hours and Safety Standards Act (40 U.S.C. §§ 3701-3708), as supplemented by the DOL regulations at 29 C.F.R. part 5. Under 40 U.S.C. § 3702 of the Act, the Contractor shall compute the wages of every mechanic and laborer, including watchmen and guards, on the basis of a standard work week of 40 hours. Work in excess of the standard work week is permissible provided that the worker is compensated at a rate of not less than one and a half times the basic rate of pay for all hours worked in excess of 40 hours in the work week. The requirements of 40 U.S.C. § 3704 are applicable to construction work and provide that no laborer or mechanic be required to work in surroundings or under working conditions which are unsanitary, hazardous or dangerous. These requirements do not apply to the purchase of supplies or materials or articles ordinarily available on the open market, or to contracts for transportation or transmission of intelligence.

ii. In the event of any violation of the clause set forth herein, the Contractor and any subcontractor responsible therefor shall be liable for the unpaid wages. In addition, the Contractor and subcontractor shall be liable to the United States (in the case of work done under contract for the District of Columbia or a territory, to such District or to such territory), for liquidated damages. Such liquidated damages shall be computed with respect to each individual laborer or mechanic, including watchmen and guards, employed in violation of this clause in the sum of $10 for each calendar day on which such individual was required or permitted to work in excess of the standard workweek of forty hours without payment of the overtime wages required by this clause.

iii. The FTA shall upon its own action or upon written request of an authorized representative of the Department of Labor withhold or cause to be withheld, from any moneys payable on account of work performed by the Contractor or subcontractor under any such contract or any other Federal contract with the same prime Contractor, or any other federally-assisted contract subject to the Contract Work Hours and Safety Standards Act, which is held by the same prime Contractor, such sums as may be determined to be necessary to satisfy any liabilities of such Contractor or subcontractor for unpaid wages and liquidated damages as provided in this section.

iv. The Contractor or subcontractor shall insert in any subcontracts the clauses set forth in this section and also a clause requiring the subcontractors to include these clauses in any lower tier subcontracts. The prime Contractor shall be responsible for compliance by any subcontractor or lower tier subcontractor with the clauses set forth in this agreement.

b) For Awards Not Involving Construction

i. The Contractor shall comply with all federal laws, regulations, and requirements providing wage and hour protections for non-construction employees, in accordance with 40 U.S.C. § 3702, Contract Work Hours and Safety Standards Act, and other relevant parts of that Act, 40 U.S.C. § 3701 et seq., and U.S. DOL regulations, "Labor Standards Provisions Applicable to Contracts Covering Federally Financed and Assisted Construction (also Labor Standards Provisions Applicable to Non-construction Contracts Subject to the Contract Work Hours and Safety Standards Act)," 29 C.F.R. part 5.

ii. The Contractor shall maintain payrolls and basic payroll records during the course of the work and shall preserve them for a period of three (3) years from the completion of the contract for all laborers and mechanics, including guards and watchmen, working on the contract. Such records shall contain the name and address of each such employee, social security number, correct classifications, hourly rates of wages paid, daily and weekly number of hours worked, deductions made, and actual wages paid.

iii. Such records maintained under this paragraph shall be made available by the Contractor for inspection, copying, or transcription by authorized representatives of the FTA and the Department of Labor, and the Contractor will permit such representatives to interview employees during working hours on the job.

iv. The contractor shall require the inclusion of the language of this clause within subcontracts of all tiers.

_____ 15. **Transit Employee Protective Arrangements:** *Applies to each contract for transit operations performed by employees of a Contractor recognized by FTA to be a transit operator.*

The Contractor agrees to comply with the following employee protective arrangements of 49 U.S.C. § 5333(b):

a) U.S. DOL Certification. Under this Contract or any Amendments thereto that involve public transportation operations that are supported with federal assistance, a certification issued by U.S. DOL is a condition of the Contract.

b) Special Warranty. When the Contract involves public transportation operations and is supported with federal assistance appropriated or made

available for 49 U.S.C. § 5311, U.S. DOL will provide a Special Warranty for its Award, including its Award of federal assistance under the Tribal Transit Program. The U.S. DOL Special Warranty is a condition of the Contract.

c) Special Arrangements. The conditions of 49 U.S.C. § 5333(b) do not apply to Contractors providing public transportation operations pursuant to 49 U.S.C. § 5310. FTA reserves the right to make case-by-case determinations of the applicability of 49 U.S.C. § 5333(b) for all transfers of funding authorized under title 23, United States Code (flex funds), and make other exceptions as it deems appropriate, and, in those instances, any special arrangements required by FTA will be incorporated herein as required.

_____ 16. **Charter Service:** *Applies to contracts for operating public transportation service.* The contractor agrees to comply with 49 U.S.C. 5323(d), 5323(r), and 49 C.F.R. part 604, which provides that recipients and subrecipients of FTA assistance are prohibited from providing charter service using federally funded equipment or facilities if there is at least one private charter operator willing and able to provide the service, except as permitted under:

a) Federal transit laws, specifically 49 U.S.C. § 5323(d);
b) FTA regulations, "Charter Service," 49 C.F.R. part 604;
c) Any other federal Charter Service regulations; or
d) Federal guidance, except as FTA determines otherwise in writing.

The contractor agrees that if it engages in a pattern of violations of FTA's Charter Service regulations, FTA may require corrective measures or impose remedies on it. These corrective measures and remedies may include:

a) Barring it or any subcontractor operating public transportation under its Award that has provided prohibited charter service from receiving federal assistance from FTA;
b) Withholding an amount of federal assistance as provided by Appendix D to part 604 of FTA's Charter Service regulations; or
c) Any other appropriate remedy that may apply.

The contractor should also include the substance of this clause in each subcontract that may involve operating public transit services.

_____ 17. **School Bus Service Operations:** *Applies to contracts for operating public transportation service.*

The contractor agrees to comply with 49 U.S.C. 5323(f), and 49 C.F.R. part 604, and not engage in school bus operations using federally funded equipment or facilities in competition with private operators of school buses, except as permitted under:

a) Federal transit laws, specifically 49 U.S.C. § 5323(f);
b) FTA regulations, "School Bus Operations," 49 C.F.R. part 605;
c) Any other Federal School Bus regulations; or
d) Federal guidance, except as FTA determines otherwise in writing.

If Contractor violates this School Bus Agreement, FTA may:

a) Bar the Contractor from receiving Federal assistance for public transportation; or
b) Require the contractor to take such remedial measures as FTA considers appropriate.

When operating exclusive school bus service under an allowable exemption, the contractor may not use federally funded equipment, vehicles, or facilities.

The Contractor should include the substance of this clause in each subcontract or purchase under this contract that may operate public transportation services.

☒ 18. **Substance Abuse Requirements: Drug & Alcohol Testing:** *Applies to third party contractors who perform safety-sensitive functions. Contractors must comply with FTA's substance abuse management program under 49 C.F.R. part 655, "Prevention of Alcohol Misuse and Prohibited Drug Use in Transit Operations." Under 49 C.F.R. § 655.4, Safety-sensitive function means any of the following duties, when performed by employees of recipients, subrecipients, operators, or contractors:*

a) Operating a revenue service vehicle, including when not in revenue service;
b) Operating a nonrevenue service vehicle, when required to be operated by a holder of a Commercial Driver's License;
c) Controlling dispatch or movement of a revenue service vehicle;
d) Maintaining (including repairs, overhaul and rebuilding) a revenue service vehicle or equipment used in revenue service. This section does not apply to the following: an employer who receives funding under 49 U.S.C. § 5307 or § 5309, is in an area less than 200,000 in population, and contracts out such services; or an employer who receives funding under 49 U.S.C. § 5311 and contracts out such services;
e) Carrying a firearm for security purposes.

Additionally, third party contractors providing testing services involving the performance of safety sensitive activities must also comply with 49 C.F.R. part 40, "Procedures for Transportation Workplace Drug and Alcohol Testing Programs."

The Contractor agrees to establish and implement a drug and alcohol testing program that complies with 49 C.F.R. part 655, produce any documentation necessary to establish its compliance with part 655, and permit any authorized representative of the United States Department of Transportation or its operating administrations, the State Oversight Agency of North Dakota and/or Minnesota, or the Cities of Fargo/Moorhead, to inspect the facilities and records associated with the implementation of the drug and alcohol testing program as required under 49 C.F.R. part 655 and review the testing process. The Contractor agrees further to certify annually its compliance with part 655 before February 1 and to submit the Management Information System (MIS) reports before February 1 to the City of Moorhead Transit Manager and City of Fargo Transit Director. To certify compliance, the Contractor shall use the "Substance Abuse Certifications" in the "Annual List of Certifications and Assurances for Federal Transit Administration Grants and Cooperative Agreements," which is published annually in the *Federal*

Register.

_X__ 19. **Cargo Preference:** *Applies to all contracts involving equipment, materials, or commodities that may be transported by ocean vessels.*
The contractor agrees:

a) to use privately owned United States-Flag commercial vessels to ship at least 50 percent of the gross tonnage (computed separately for dry bulk carriers, dry cargo liners, and tankers) involved, whenever shipping any equipment, material, or commodities pursuant to the underlying contract to the extent such vessels are available at fair and reasonable rates for United States-Flag commercial vessels;

b) to furnish within 20 working days following the date of loading for shipments originating within the United States or within 30 working days following the date of loading for shipments originating outside the United States, a legible copy of a rated, "on-board" commercial ocean bill-of-lading in English for each shipment of cargo described in the preceding paragraph to the Division of National Cargo, Office of Market Development, Maritime Administration, Washington, DC 20590 and to the FTA recipient (through the contractor in the case of a subcontractor's bill-of-lading.); and

c) to include these requirements in all subcontracts issued pursuant to this contract when the subcontract may involve the transport of equipment, material, or commodities by ocean vessel.

_X__ 20. **Davis-Bacon Act and Copeland Act – Prevailing Wage and Anti-Kickback:**
Applies to all FTA funded contracts for all prime construction, alteration or repair contracts in excess of $2,000. The recipient will ensure that each third party contractor complies with all federal laws, regulations, and requirements, including:

a) Prevailing Wage Requirements
   i. Federal transit laws, specifically 49 U.S.C. § 5333(a), (FTA's "Davis-Bacon Related Act");
   ii. The Davis-Bacon Act, 40 U.S.C. §§ 3141 – 3144, 3146, and 3147; and
   iii. U.S. DOL regulations, "Labor Standards Provisions Applicable to Contracts Covering Federally Financed and Assisted Construction (also Labor Standards Provisions Applicable to Non-construction Contracts Subject to the Contract Work Hours and Safety Standards Act)," 29 C.F.R. part 5.

b) "Anti-Kickback" Prohibitions
   i. Section 1 of the Copeland "Anti-Kickback" Act, as amended, 18 U.S.C. § 874;
   ii. Section 2 of the Copeland "Anti-Kickback" Act, as amended, 40 U.S.C. § 3145; and
   iii. U.S. DOL regulations, "Contractors and Subcontractors on Public Building or Public Work Financed in Whole or in part by Loans or Grants from the United States," 29 C.F.R. part 3.

For all prime construction, alteration or repair contracts in excess of $2,000 awarded by FTA, the Contractor shall comply with the Davis-Bacon Act and the Copeland "Anti-Kickback" Act. Under 49 U.S.C. § 5333(a), prevailing wage protections apply to laborers and mechanics employed on FTA assisted

construction, alteration, or repair projects. The Contractor will comply with the Davis-Bacon Act, 40 U.S.C. §§ 3141-3144, and 3146-3148 as supplemented by DOL regulations at 29 C.F.R. part 5, "Labor Standards Provisions Applicable to Contracts Governing Federally Financed and Assisted Construction." In accordance with the statute, the Contractor shall pay wages to laborers and mechanics at a rate not less than the prevailing wages specified in a wage determination made by the Secretary of Labor. In addition, the Contractor agrees to pay wages not less than once a week. The Contractor shall also comply with the Copeland "Anti-Kickback" Act (40 U.S.C. § 3145), as supplemented by DOL regulations at 29 C.F.R. part 3, "Contractors and Subcontractors on Public Building or Public Work Financed in Whole or in part by Loans or Grants from the United States." The Contractor is prohibited from inducing, by any means, any person employed in the construction, completion, or repair of public work, to give up any part of the compensation to which he or she is otherwise entitled.

_____ 21. **Energy Conservation:** *Applies to all contracts. The Recipient agrees to, and assures that its subrecipients, if any, will comply with the mandatory energy standards and policies of its state energy conservation plans under the Energy Policy and Conservation Act, as amended, 42 U.S.C. § 6201 et seq., and perform an energy assessment for any building constructed, reconstructed, or modified with federal assistance as required under FTA regulations, "Requirements for Energy Assessments," 49 C.F.R. part 622, subpart C.*

Contractor shall recognize mandatory standards and policies relating to energy efficiency, which are contained in the State energy conservation plan issued in compliance with the Energy Policy and Conservation Act (42 USC Section 6321 et seq).

_____ 22. **Construction—Special Requirements:** *Applies to FTA assisted construction projects:*

a) Bonding. The Common Grant Rules require bonds for all contracts exceeding the simplified acquisition threshold (exceeding $150,000) unless FTA determines that other arrangements adequately protect the Federal interest. FTA's bonding policies are as follows:

i. Bid Guarantee. Both FTA and the Common Grant Rules generally require each bidder to provide a bid guarantee equivalent to 5 percent of its bid price. The "bid guarantee" must consist of a firm commitment such as a bid bond, certified check, or other negotiable instrument accompanying a bid to ensure that the bidder will honor its bid upon acceptance.

ii. Performance Bond. Both FTA and the Common Grant Rules generally require the third party contractor to obtain a performance bond for 100 percent of the contract price. A "performance bond" is obtained to ensure completion of the obligations under the third party contract.

iii. Payment Bond. The Common Grant Rules generally require the third party contractor to obtain a standard payment bond for 100 percent of the

contract price. A "payment bond" is obtained to ensure that the contractor will pay all people supplying labor and material for the third party contract as required by law. FTA, however, has determined that payment bonds in the following amounts are adequate to protect FTA's interest and will accept a local bonding policy that meets the following minimums:

- Less Than $1 Million. Fifty percent of the contract price if the contract price is not more than $1 million,
- More Than $1 Million but Less Than $5 Million. Forty percent of the contract price if the contract price is more than $1 million but not more than $5 million, or
- More Than $5 Million. Two and one half million dollars if the contract price is more than $5 million.

iv. Acceptable Sureties. The Common Grant Rule for non-governmental recipients requires the non-governmental recipient to obtain construction bonds from companies holding certificates of authority as acceptable sureties under Department of the Treasury regulations, "Surety Companies Doing Business with the United States," 31 CFR Part 223. For a current list of approved sureties, see Department of the Treasury's Listing of Approved Sureties (Department Circular 570), http://fms.treas.gov/c570/c570.html. FTA encourages each governmental recipient to require similarly acceptable sureties.

v. Reduced Bonding. FTA recognizes that bonding costs can be expensive. FTA will accept a local bonding policy that conforms to the minimums described in this subparagraph 2.h(1) of this Chapter. FTA reserves the right to approve bonding amounts that do not conform to these minimums if the local bonding policy adequately protects the Federal interest. A recipient that wishes to adopt less stringent bonding requirements, for a specific class of projects, or for a particular project should submit its policy and rationale to the Regional Administrator for the region administering the project.

vi. Excessive Bonding. Compliance with State and local bonding policies that are greater than FTA's bonding requirements do not require FTA approval. FTA recognizes that in some situations bond requirements can be useful if the recipient has a material risk of loss because of a failure of the prospective contractor. This is particularly so if the risk results from the likelihood of the contractor's bankruptcy or financial failure when the work is partially completed. Nevertheless, if the recipient's "excessive bonding" requirements would violate the Common Grant Rules as restrictive of competition, FTA will not provide Federal assistance for procurements encumbered by those requirements. Consequently, if the recipient's bonding policies far exceed those described in this subsection; FTA reminds the recipient that it may find it useful to submit its policy and rationale to the Regional Administrator for the region administering the project.

_____ 23. **Bus Testing:** *Applies only to the purchase or lease of any new bus model, or any bus model with a major change in configuration or components to be acquired or leased with funds obligated by FTA. Recipients are responsible for determining whether a vehicle to be acquired requires full or partial testing or has already satisfied the bus testing requirements by achieving a passing test score in accordance with 49 C.F.R. part 665. Recipients must certify compliance with FTA's bus testing requirements in all grant applications for FTA funding for bus procurements.*

The Contractor [Manufacturer] agrees to comply with the Bus Testing requirements under 49 U.S.C. 5318(e) and FTA's implementing regulation at 49 C.F.R. part 665 to ensure that the requisite testing is performed for all new bus models or any bus model with a major change in configuration or components, and that the bus model has achieved a passing score. Upon completion of the testing, the contractor shall obtain a copy of the bus testing reports from the operator of the testing facility and make that report(s) publicly available prior to final acceptance of the first vehicle by the recipient.

_____ 24. **Fly America:** *Applies to the transportation of persons or property, by air, between a place in the U.S. and a place outside the U.S., or between places outside the U.S., when the FTA will participate in the costs of such air transportation.*

a) *Definitions.* As used in this clause--

"International air transportation" means transportation by air between a place in the United States and a place outside the United States or between two places both of which are outside the United States.

"United States" means the 50 States, the District of Columbia, and outlying areas.

"U.S.-flag air carrier" means an air carrier holding a certificate under 49 U.S.C. Chapter 411.

b) When Federal funds are used to fund travel, Section 5 of the International Air Transportation Fair Competitive Practices Act of 1974 (49 U.S.C. 40118) (Fly America Act) requires contractors, recipients, and others use U.S.-flag air carriers for U.S. Government-financed international air transportation of personnel (and their personal effects) or property, to the extent that service by those carriers is available. It requires the Comptroller General of the United States, in the absence of satisfactory proof of the necessity for foreign-flag air transportation, to disallow expenditures from funds, appropriated or otherwise established for the account of the United States, for international air transportation secured aboard a foreign-flag air carrier if a U.S.-flag air carrier is available to provide such services.

c) If available, the Contractor, in performing work under this contract, shall use U.S.-flag carriers for international air transportation of personnel (and their personal effects) or property.

d) In the event that the Contractor selects a carrier other than a U.S.-flag air carrier for international air transportation, the Contractor shall include a statement on vouchers involving such transportation essentially as follows:

Statement of Unavailability of U.S.-Flag Air Carriers
International air transportation of persons (and their personal effects) or property by U.S.-flag air carrier was not available or it was necessary to use foreign-flag air carrier service for the following reasons. See FAR § 47.403. *[State reasons]:*

_____
(End of statement)

e) The Contractor shall include the substance of this clause, including this paragraph (e), in each subcontract or purchase under this contract that may involve international air transportation.

_____ 25. **Patent Rights and Rights in Data:** *Applies when entering into a contract (or subcontract) with a small business firm or nonprofit organization for the performance of experimental, developmental, or research work under the FTA award. The recipient or subrecipient must comply with the requirements of 37 C.F.R. part 401, "Rights to Inventions Made by Nonprofit Organizations and Small Business Firms Under Government Grants, Contracts and Cooperative Agreements," and any implementing regulations issued by the awarding agency. Except in the case of an "other agreement" in which the Federal Government has agreed to take more limited rights, the Federal Government is entitled to a non-exclusive, royalty free license to use the resulting invention, or patent the invention for Federal Government purposes. The FTA has the right to:*

a) Obtain, reproduce, publish, or otherwise use the data produced under a Federal award; and
b) Authorize others to receive, reproduce, publish, or otherwise use such data for Federal purposes.

Intellectual Property Rights: This Project is funded through a Federal award with FTA for experimental, developmental, or research work purposes. As such, certain Patent Rights and Data Rights apply to all subject data first produced in the performance of this Contract. The Contractor shall grant the AGENCY intellectual property access and licenses deemed necessary for the work performed under this Agreement and in accordance with the requirements of 37 C.F.R. part 401, "Rights to Inventions Made by Nonprofit Organizations and Small Business Firms Under Government Grants, Contracts and Cooperative Agreements," and any implementing regulations issued by FTA or U.S. DOT. The terms of an intellectual property agreement and software license rights will be finalized prior to execution of this Agreement and shall, at a minimum, include the following restrictions: Except for its own internal use, the Contractor may not publish or reproduce subject data in whole or in part, or in any manner or form, nor may the Contractor authorize others to do so, without the written consent of FTA, until such time as FTA may have either released or approved the release of such data to the public. This restriction on publication, however, does not apply to any contract with an academic institution. For purposes of this agreement, the term "subject data" means recorded information whether or not copyrighted, and

that is delivered or specified to be delivered as required by the Contract. Examples of "subject data" include, but are not limited to computer software, standards, specifications, engineering drawings and associated lists, process sheets, manuals, technical reports, catalog item identifications, and related information, but do not include financial reports, cost analyses, or other similar information used for performance or administration of the Contract.

a) The Federal Government reserves a royalty-free, non-exclusive and irrevocable license to reproduce, publish, or otherwise use, and to authorize others to use for "Federal Government Purposes," any subject data or copyright described below. For "Federal Government Purposes," means use only for the direct purposes of the Federal Government. Without the copyright owner's consent, the Federal Government may not extend its Federal license to any other party.
    i. Any subject data developed under the Contract, whether or not a copyright has been obtained; and
    ii. Any rights of copyright purchased by the Contractor using Federal assistance in whole or in part by the FTA.

b) Unless FTA determines otherwise, the Contractor performing experimental, developmental, or research work required as part of this Contract agrees to permit FTA to make available to the public, either FTA's license in the copyright to any subject data developed in the course of the Contract, or a copy of the subject data first produced under the Contract for which a copyright has not been obtained. If the experimental, developmental, or research work, which is the subject of this Contract, is not completed for any reason whatsoever, all data developed under the Contract shall become subject data as defined herein and shall be delivered as the Federal Government may direct.

c) Unless prohibited by state law, upon request by the Federal Government, the Contractor agrees to indemnify, save, and hold harmless the Federal Government, its officers, agents, and employees acting within the scope of their official duties against any liability, including costs and expenses, resulting from any willful or intentional violation by the Contractor of proprietary rights, copyrights, or right of privacy, arising out of the publication, translation, reproduction, delivery, use, or disposition of any data furnished under that contract. The Contractor shall be required to indemnify the Federal Government for any such liability arising out of the wrongful act of any employee, official, or agents of the Federal Government.

d) Nothing contained in this clause on rights in data shall imply a license to the Federal Government under any patent or be construed as affecting the scope of any license or other right otherwise granted to the Federal Government under any patent.

e) Data developed by the Contractor and financed entirely without using Federal assistance provided by the Federal Government that has been incorporated into work required by the underlying Contract is exempt from the requirements herein, provided that the Contractor identifies those data in writing at the time of delivery of the Contract work.

f) The Contractor agrees to include these requirements in each subcontract for experimental, developmental, or research work financed in whole or in part with Federal assistance.

_____ 26. **Pre-Award and Post-Delivery Audits of Rolling Stock Purchases:** *Applies to the purchase of revenue service rolling stock with FTA funds and must comply with the pre-award and post-delivery audit requirements set forth in 49 U.S.C. 5323(m) and supplemented by 49 C.F.R. part 663.*

The Contractor agrees to comply with 49 U.S.C. § 5323(m) and FTA's implementing regulation at 49 C.F.R. part 663. The Contractor shall comply with the Buy America certification(s) submitted with its proposal/bid. The Contractor agrees to participate and cooperate in any pre-award and post-delivery audits performed pursuant to 49 C.F.R. part 663 and related FTA guidance.

_X_ 27. **Recycled Products:** *Applies to all third party contractors and their contracts at every tier and subrecipients and their subcontracts at every tier where the value of an EPA designated item exceeds $10,000. Applies to States and local governmental authorities to provide a competitive preference to products and services that conserve natural resources, protect the environment, and are energy efficient. Recipients are required to procure only items designated in guidelines of the Environmental Protection Agency (EPA) at 40 C.F.R. part 247 that contain the highest percentage of recovered materials practicable, consistent with maintaining a satisfactory level of competition, where the purchase price of the item exceeds $10,000 or the value of the quantity acquired during the preceding fiscal year exceeded $10,000.*

The Contractor agrees to provide a preference for those products and services that conserve natural resources, protect the environment, and are energy efficient by complying with and facilitating compliance with Section 6002 of the Resource Conservation and Recovery Act, as amended, 42 U.S.C. § 6962, and U.S. Environmental Protection Agency (U.S. EPA), “Comprehensive Procurement Guideline for Products Containing Recovered Materials,” 40 C.F.R. part 247.

_X_ 28. **Safe Operation of Motor Vehicles:** *Applies to all federally funded third party contracts.*

Seat Belt Use
The Contractor is encouraged to adopt and promote on-the-job seat belt use policies and programs for its employees and other personnel that operate company-owned vehicles, company-rented vehicles, or personally operated vehicles. The terms “company-owned” and “company-leased” refer to vehicles owned or leased either by the Contractor or AGENCY.

Distracted Driving
The Contractor agrees to adopt and enforce workplace safety policies to decrease crashes caused by distracted drivers, including policies to ban text messaging while using an electronic device supplied by an employer, and driving a vehicle the driver owns or rents, a vehicle Contactor owns, leases, or rents, or a

privately-owned vehicle when on official business in connection with the work performed under this agreement.

☒ 29. **Seismic Safety:** *Applies only to contracts for the construction of new buildings or additions to existing buildings.*

The contractor agrees that any new building or addition to an existing building will be designed and constructed in accordance with the standards for Seismic Safety required in Department of Transportation (DOT) Seismic Safety Regulations 49 C.F.R. part 41 and will certify to compliance to the extent required by the regulation. The contractor also agrees to ensure that all work performed under this contract, including work performed by a subcontractor, is in compliance with the standards required by the Seismic Safety regulations and the certification of compliance issued on the project.

Note: Information on clauses was obtained from the FTA Best Practices Procurement and Lessons Learned Manual, and Circular FTA C 4220.1 as amended Third Party Contracting Guidance.

https://www.transit.dot.gov/funding/procurement/third-party-procurement/best-practices-procurement-manual

https://www.transit.dot.gov/regulations-and-guidance/fta-circulars/third-party-contracting-guidance

Exhibit A – Cost Proposal Form

Cost Proposal Form – Include completed cost form (see below) for each task in a sealed envelope – labeled "**Sealed Cost Form(s)** – **Vendor Name**" and submit concurrently with the proposal as part of the overall RFQ response. Changes in the final contract amount and contract extensions are not anticipated.

REQUIRED BUDGET FORMAT
Summary of Estimated Project Cost

						Task #:	
1.	**Direct Labor**	**Hours**	**x**	**Rate**	**=**	**Project Cost**	**Total**
	Name, Title, Function	0.00	x	0.00	=	0.00	0.00
			x		=	0.00	0.00
			x		=	0.00	0.00
				Subtotal	=	0.00	0.00
2.	**Overhead/Indirect Cost (expressed as indirect rate x direct labor)**					0.00	0.00
3.	**Subcontractor Costs**					0.00	0.00
4.	**Materials and Supplies Costs**					0.00	0.00
5.	**Travel Costs**					0.00	0.00
6.	**Fixed Fee**					0.00	0.00
7.	**Miscellaneous Costs**					0.00	0.00
Total Cost					=	0.00	0.00

Exhibit B – DEBARMENT AND SUSPENSION CERTIFICATION

The proposer certifies to the best of its knowledge and belief, and that it and its principals:
1. Are not presently debarred, suspended, proposed for debarment, declared ineligible, or voluntarily excluded from covered transactions by any Federal department or agency;

2. Have not, within a three-year period preceding this proposal/contract, been convicted or had a civil judgment awarded against them for commission of fraud or a criminal offense in connection with obtaining, attempting to obtain, or performing a public bribery, falsification or destruction of records, making false statement, or receiving stolen property;

3. Are not presently indicted for or otherwise criminally or civilly charged by a government entity (Federal, State or Local) with commission of any of the offenses enumerated in paragraph (2) of this certification;

4. Have not, within a three-year period preceding this application/proposal/contract, had one or more public transactions (Federal, State, Local) terminated for cause or default.

THE PARTICIPANT, CERTIFIES OR AFFIRMS THE TRUTHFULNESS AND ACCURACY OF THE CONTENTS OF THE STATEMENTS SUBMITTED ON OR WITH THIS CERTIFICATION AND UNDERSTANDS THAT THE PROVISIONS OF 31 U.S.C. 3801 ET SEQ ARE APPLICABLE THERETO.

_____ _____
Name Date

Exhibit C - LOBBYING RESTRICTIONS CERTIFICATION

The undersigned certifies, to the best of his or her knowledge and belief, that:

1. No Federal appropriated funds have been paid or will be paid, by or on behalf of the undersigned, to any person for influencing or attempting to influence an officer or employee of an agency, a Member of Congress, an officer or employee of Congress, or an employee of a Member of Congress in connection with the awarding of any Federal contract, the making of any Federal grant, the making of any Federal loan, the entering into of any cooperative agreement, and the extension, continuation, renewal, amendment, or modification of any Federal contract, grant, loan, or cooperative agreement.

2. If any funds other than Federal appropriated funds have been paid or will be paid to any person for influencing or attempting to influence an officer or employee of any agency, a Member of Congress, an officer or employee of Congress, or an employee of a Member of Congress in connection with this Federal contract, grant, loan, or cooperative agreement, the undersigned shall complete and submit Standard Form-LLL, “Disclosure Form to Report Lobbying,” in accordance with its instructions.

3. The undersigned shall require that the language of this certification be included in the award documents for all sub-awards at all tiers (including subcontracts, sub-grants, and contracts under grants, loans, and cooperative agreements) and that all subrecipients shall certify and disclose accordingly.

This certification is a material representation of fact upon which reliance was placed when this transaction was made or entered into. Submission of this certification is a prerequisite for making or entering into this transaction imposed by section 1352, title 31, U.S. Code. Any person who fails to file the required certification shall be subject to a civil penalty of not less than $10,000 and not more than $100,000 for each such failure.

_____ Signature of Contractor's Authorized Official

_____ Name and Title of Contractor's Authorized Official

_____ Date

Exhibit D – Standard Form 330

ARCHITECT- ENGINEER QUALIFICATIONS

PART 1- CONTRACT-SPECIFIC QUALIFICATIONS

A. CONTRACT INFORMATION

1. TITLE AND LOCATION *(City and State)*

2. PUBLIC NOTICE DATE

3. SOLICITATION OR PROJECT NUMBER

B. ARCHITECT-ENGINEER POINT OF CONTACT

4. NAME AND TITLE

5. NAME OF FIRM

6. TELEPHONE NUMBER

7. FAX NUMBER

8. E-MAIL ADDRESS

C. PROPOSED TEAM

(Complete this section for the prime contractor and all key subcontractors.)

	(Check) PRIME	J-V PARTNER	SUBCON-TRACTOR	9. FIRM NAME	10. ADDRESS	11. ROLE IN THIS CONTRACT
a.				☐CHECK IF BRANCH OFFICE		
b.				☐CHECK IF BRANCH OFFICE		
c.				☐CHECK IF BRANCH OFFICE		
d.				☐CHECK IF BRANCH OFFICE		
e.				☐CHECK IF BRANCH OFFICE		
f.				☐CHECK IF BRANCH OFFICE		

D. ORGANIZATIONAL CHART OF PROPOSED TEAM ☐

(Attached)

8/2016)

E. RESUMES OF KEY PERSONNEL PROPOSED FOR THIS CONTRACT

(Complete one Section E for each key person.)

12. NAME	13. ROLE IN THIS CONTRACT	14. YEARS EXPERIENCE	
		a. TOTAL	b. WITH CURRENT FIRM

15. FIRM NAME AND LOCATION *(City and State)*

16. EDUCATION *(Degree and Specialization)* *Discipline)*	17. CURRENT PROFESSIONAL REGISTRATION *(State and*

18. OTHER PROFESSIONAL QUALIFICATIONS *(Publications, Organizations, Training, Awards, etc.)*

19 RELEVANT PROJECTS

a.	(1) TITLE AND LOCATION *(City and state)*	(2) YEAR COMPLETED PROFESSIONAL SERVICES | CONSTRUCTION *(If applicable)*
	(3) BRIEF DESCRIPTION *(Brief scope, size, cost, etc.)* AND SPECIFIC ROLE	☐ Check if project performed with current firm
b.	(1) TITLE AND LOCATION *(City and state)*	(2) YEAR COMPLETED PROFESSIONAL SERVICES | CONSTRUCTION *(If applicable)*
	(3) BRIEF DESCRIPTION *(Brief scope, size, cost, etc.)* AND SPECIFIC ROLE	☐ Check if project performed with current firm
c.	(1) TITLE AND LOCATION *(City and state)*	(2) YEAR COMPLETED PROFESSIONAL SERVICES | CONSTRUCTION *(If applicable)*
	(3) BRIEF DESCRIPTION *(Brief scope, size, cost, etc.)* AND SPECIFIC ROLE	☐ Check if project performed with current firm
d.	(1) TITLE AND LOCATION *(City and state)*	(2) YEAR COMPLETED PROFESSIONAL SERVICES | CONSTRUCTION *(If applicable)*
	(3) BRIEF DESCRIPTION *(Brief scope, size, cost, etc.)* AND SPECIFIC ROLE	☐ Check if project performed with current firm
	(1) TITLE AND LOCATION *(City and state)*	(2) YEAR COMPLETED PROFESSIONAL SERVICES | CONSTRUCTION *(If applicable)*

e. (3) BRIEF DESCRIPTION *(Brief scope, size, cost, etc.)* AND SPECIFIC ROLE

☐ Check if project performed with current firm

G. KEY PERSONNEL PARTICIPATION IN EXAMPLE PROJECTS

26. NAMES OF KEY PERSONNEL *(From Section E, Block 12)*	27. ROLE IN THIS CONTRACT *(From Section E, Block 13)*	28. EXAMPLE PROJECTS LISTED IN SECTION F *(Fill in "Example Projects Key" section below before completing table. Place "X" under project key number for participation in* same *or similar role.)*									
		1	2	3	4	5	6	7	8	9	10

29. EXAMPLE PROJECTS KEY

NUMBER	TITLE OF EXAMPLE PROJECT *(From Section* F)	NUMBER	TITLE OF EXAMPLE PROJECT *(From Section F)*
1		6	
2		7	
3		8	

4		9	
5		10	

H. ADDITIONAL INFORMATION

30. PROVIDE ANY ADDITIONAL INFORMATION REQUESTED BY THE AGENCY. ATTACH ADDITIONAL SHEETS AS NEEDED.

I. AUTHORIZED REPRESENTATIVE

The foregoing is a statement of facts.

31. SIGNATURE

32. DATE

33. NAME AND TITLE

ARCHITECT-ENGINEER QUALIFICATIONS

1. SOLICITATION NUMBER *(If any)*

PART II - GENERAL QUALIFICATIONS

(If a firm has branch offices, complete for each specific branch office seeking work.)

2a. FIRM (or *Branch Office)* NAME

3. YEAR ESTABLISHED

4. UNIQUE ENTITY IDENTIFIER

2b. STREET

5. OWNERSHIP

a. TYPE

2c. CITY

2d. STATE

2e. ZIP CODE

b. SMALL BUSINESS STATUS

6a. POINT OF CONTACT NAME AND TITLE

7. NAME OF FIRM *(If Block 2a is a Branch Office)*

6b. TELEPHONE NUMBER

16c. E-MAIL ADDRESS

8a. FORMER FIRM NAME(S) *(If any)*

8b. YEAR ESTABLISHED

8c. UNIQUE ENTITY IDENTIFIER

9. EMPLOYEES BY DISCIPLINE				10. PROFILE OF FIRM'S EXPERIENCE AND ANNUAL AVERAGE REVENUE FOR LAST 5 YEARS		
a. Function Code	b. Discipline	c. Number of Employees (1) FIRM	(2) BRANCH	a. Profile Code	b. Experience	c. Revenue Index Number *(see below)*

Other Employees						
Total						

11. ANNUAL AVERAGE PROFESSIONAL SERVICES REVENUES OF FIRM FOR LAST 3 YEARS *(Insert revenue index number shown at right)*	
a. Federal Work	
b. Non-Federal Work	
c. Total Work	

PROFESSIONAL SERVICES REVENUE INDEX NUMBER

1. Less than $100,000	6. $2 million to less than $5 million
2. $100,000 to less than $250,000	7. $5 million to less than $10 million
3. $250,000 to less than $500,000	8. $10 million to less than $25 million
4. $500,000 to less than $1 million	9. $25 million to less than $50 million
5. $1 million to less than $2 million	10. $50 million or greater

12. AUTHORIZED REPRESENTATIVE

The foregoing is a *statement of facts.*

a. SIGNATURE b. DATE

c. NAME AND TITLE

Exhibit E – Stertil-Koni Site Specific Drawings

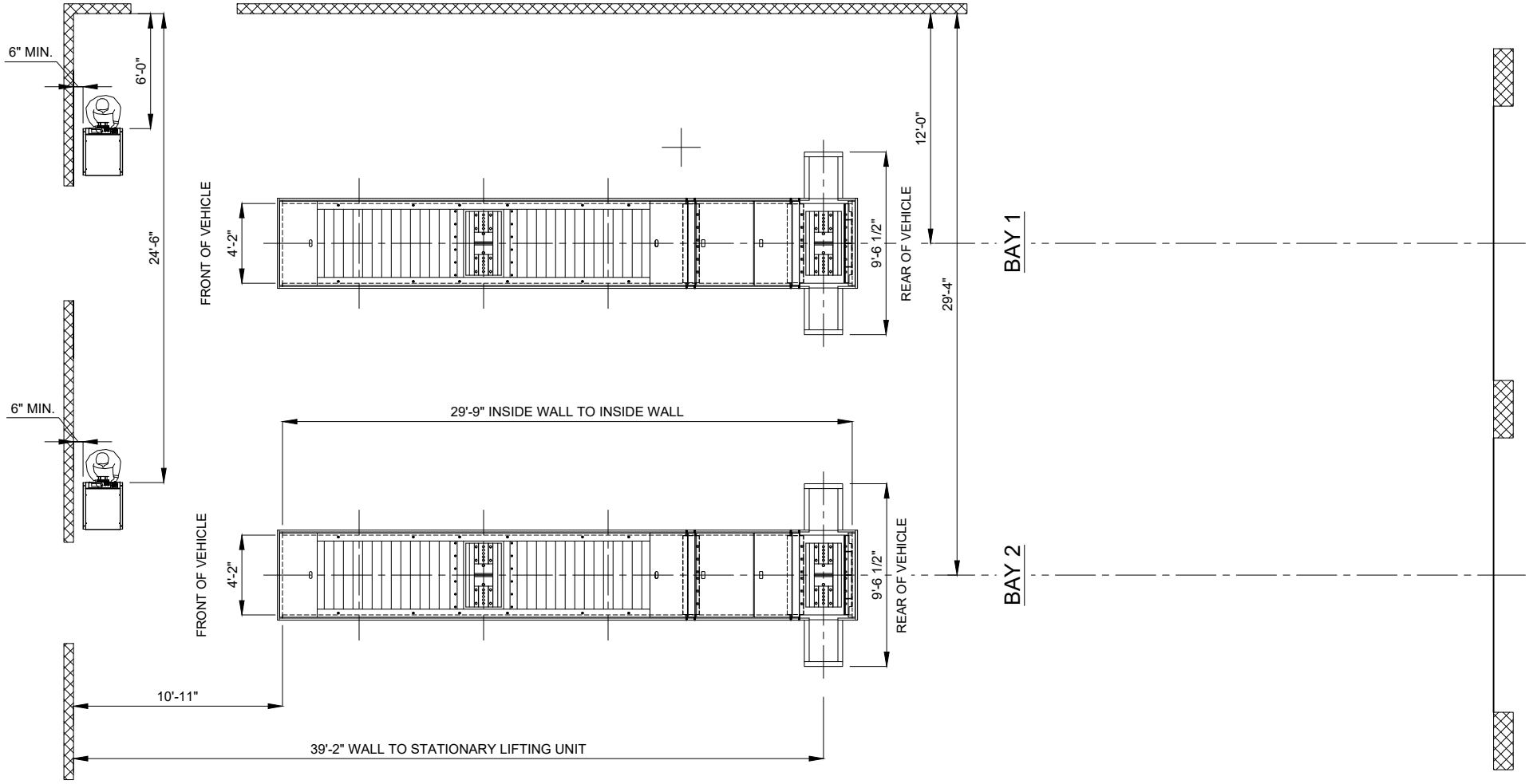

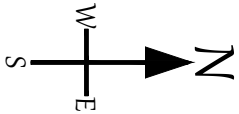

ECO IN BAY PLAN

NOT FOR CONSTRUCTION

PRELIMINARY

APPROVED BY:	REVISIONS	PROJECT: Fargo Transit, ND	stertil KONI
SIGNATURE:		LIFT INSTALLER: D & J Equipment	STERTIL-KONI USA, INC. 200 LOG CANOE CIRCLE, STEVENSVILLE, MD 21666 TEL. 800-336-6637
PRINT NAME:		DESCRIPTION: ECO 60-13 RH 135-291 (CP)	DRAWN BY JGP 03/11/21 NOT TO SCALE
DATE:		SKU-2021-0311A-JGP-P00	CHECKED BY MML 03/11/21 SHEET 1 OF 7

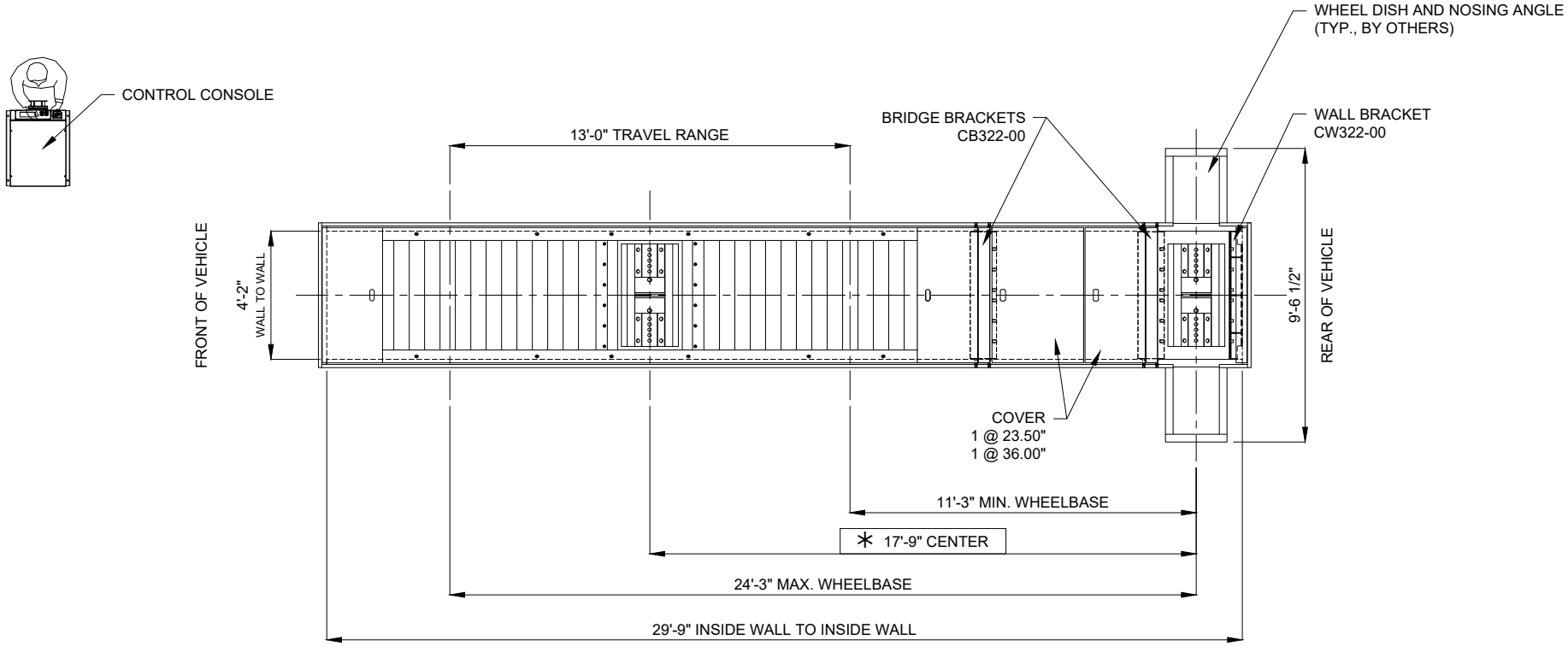

* CONTROL DIMENSION:
℄ OF STATIONARY LIFTING UNIT TO
℄ OF MOVABLE LIFTING UNIT

ECO PLAN

NOT FOR CONSTRUCTION

PRELIMINARY

APPROVED BY:	REVISIONS	PROJECT: Fargo Transit, ND	stertil KONI
SIGNATURE:		LIFT INSTALLER: D & J Equipment	STERTIL-KONI USA, INC. 200 LOG CANOE CIRCLE, STEVENSVILLE, MD 21666 TEL. 800-336-6637
PRINT NAME:		DESCRIPTION: ECO 60-13 RH 135-291 (CP)	DRAWN BY JGP 03/11/21 NOT TO SCALE
DATE:		SKU-2021-0311A-JGP-P00	CHECKED BY MML 03/11/21 SHEET 2 OF 7

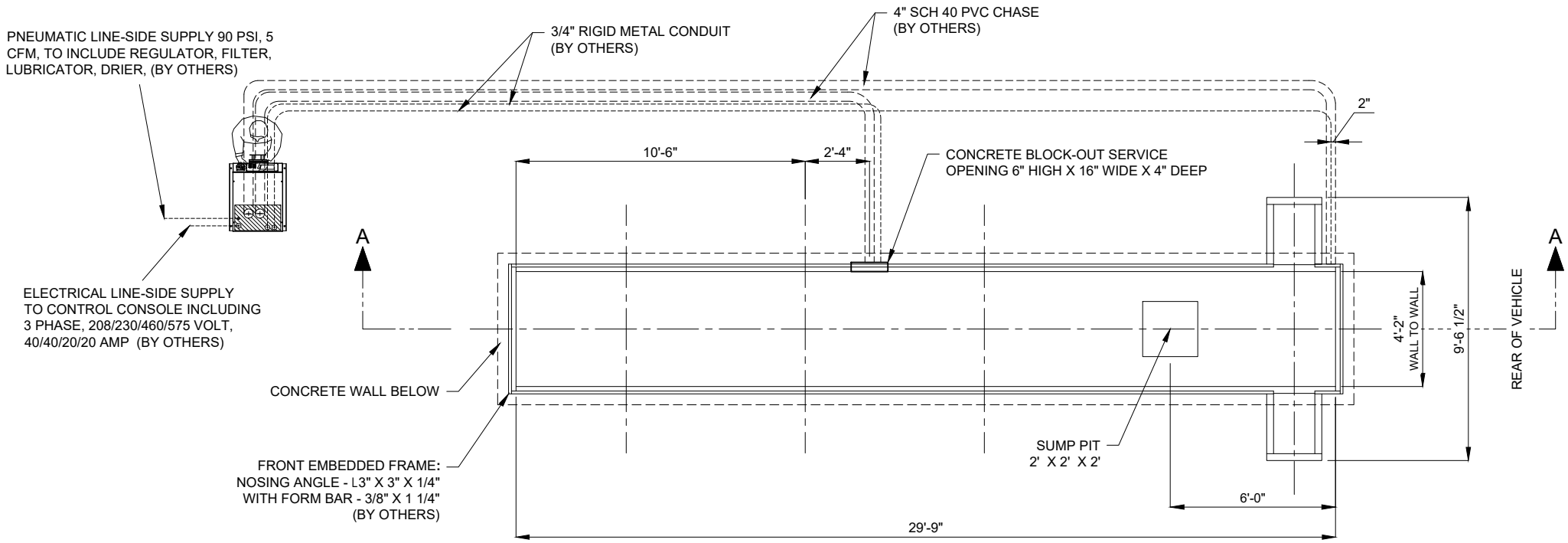

PIT & CONDUIT PLAN

NOT FOR CONSTRUCTION

PRELIMINARY

APPROVED BY:	REVISIONS	PROJECT: Fargo Transit, ND	stertil KONI
SIGNATURE:		LIFT INSTALLER: D & J Equipment	STERTIL-KONI USA, INC. 200 LOG CANOE CIRCLE, STEVENSVILLE, MD 21666 TEL. 800-336-6637
PRINT NAME:		DESCRIPTION: ECO 60-13 RH 135-291 (CP)	DRAWN BY JGP 03/11/21 NOT TO SCALE
DATE:		SKU-2021-0311A-JGP-P00	CHECKED BY MML 03/11/21 SHEET 3 OF 7

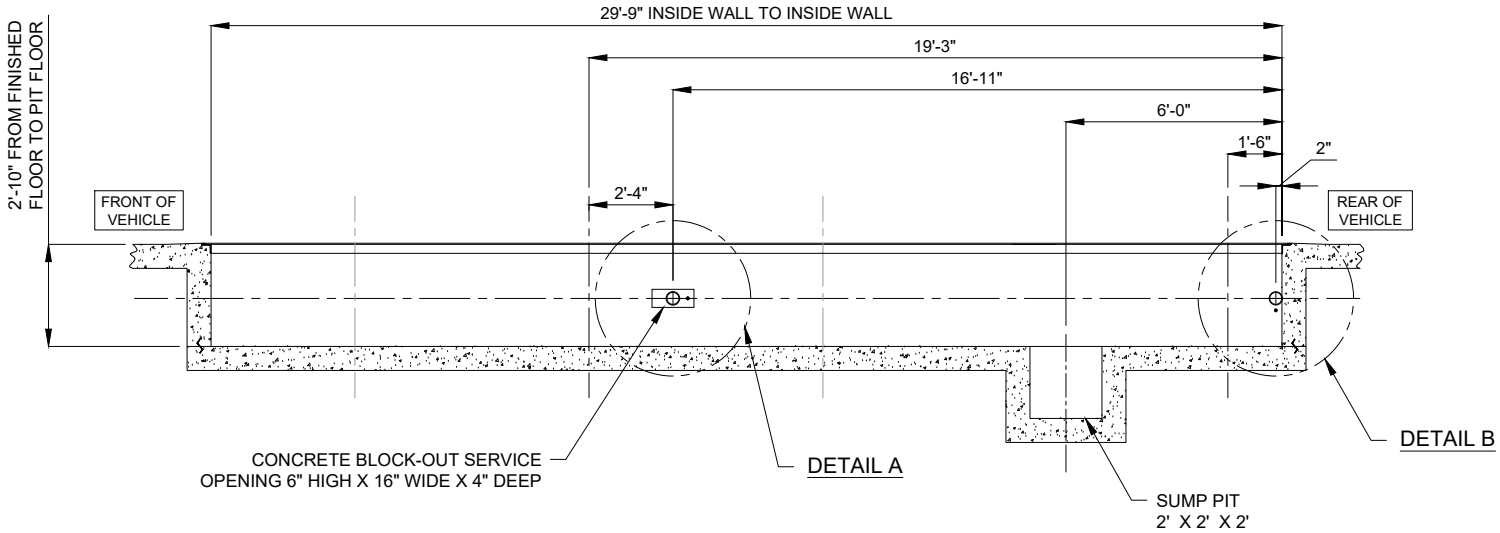

SECTION A - A LOOKING TOWARD CONTROL CONSOLE
(CONSOLE NOT SHOWN)

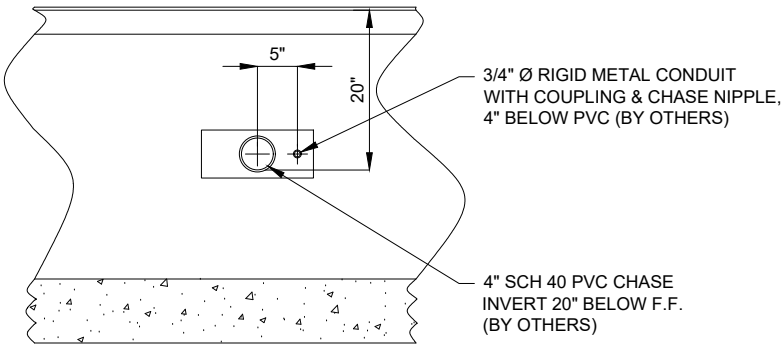

DETAIL A

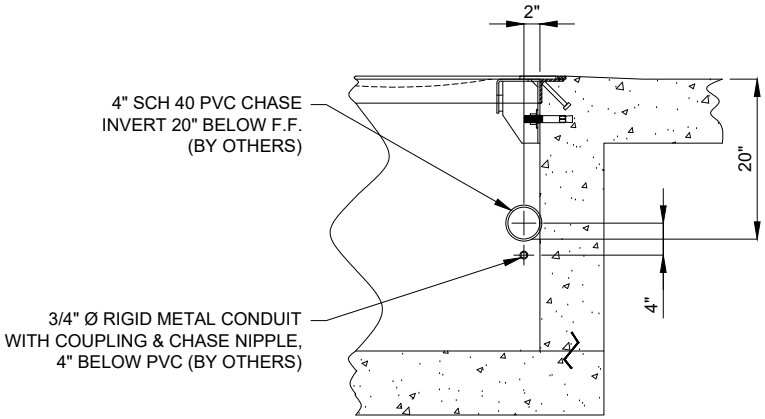

DETAIL B

ELEVATION DETAILS

NOT FOR CONSTRUCTION

PRELIMINARY

APPROVED BY:	REVISIONS	PROJECT: Fargo Transit, ND	stertil KONI
SIGNATURE:		LIFT INSTALLER: D & J Equipment	STERTIL-KONI USA, INC. 200 LOG CANOE CIRCLE, STEVENSVILLE, MD 21666 TEL. 800-336-6637
PRINT NAME:		DESCRIPTION: ECO 60-13 RH 135-291 (CP)	
DATE:		SKU-2021-0311A-JGP-P00	

DRAWN BY	JGP	03/11/21	NOT TO SCALE
CHECKED BY	MML	03/11/21	SHEET 4 OF 7

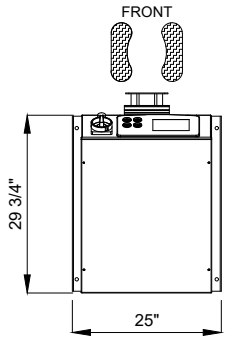

CONTROL CONSOLE

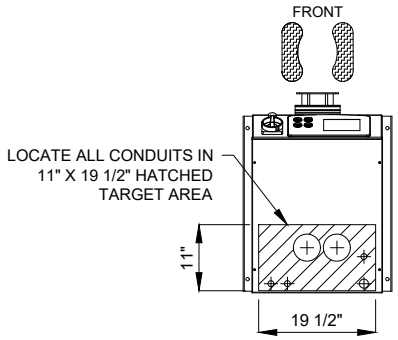

INTERNAL CONDUITS

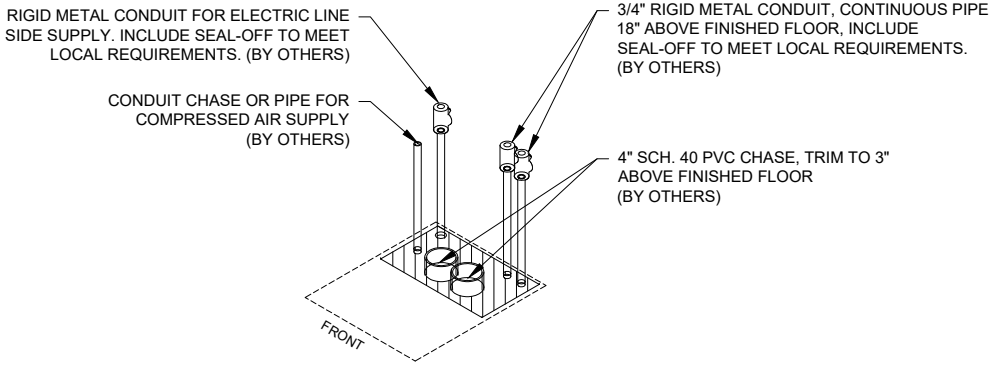

ISOMETRIC VIEW OF CONDUITS
AT CONTROL CONSOLE

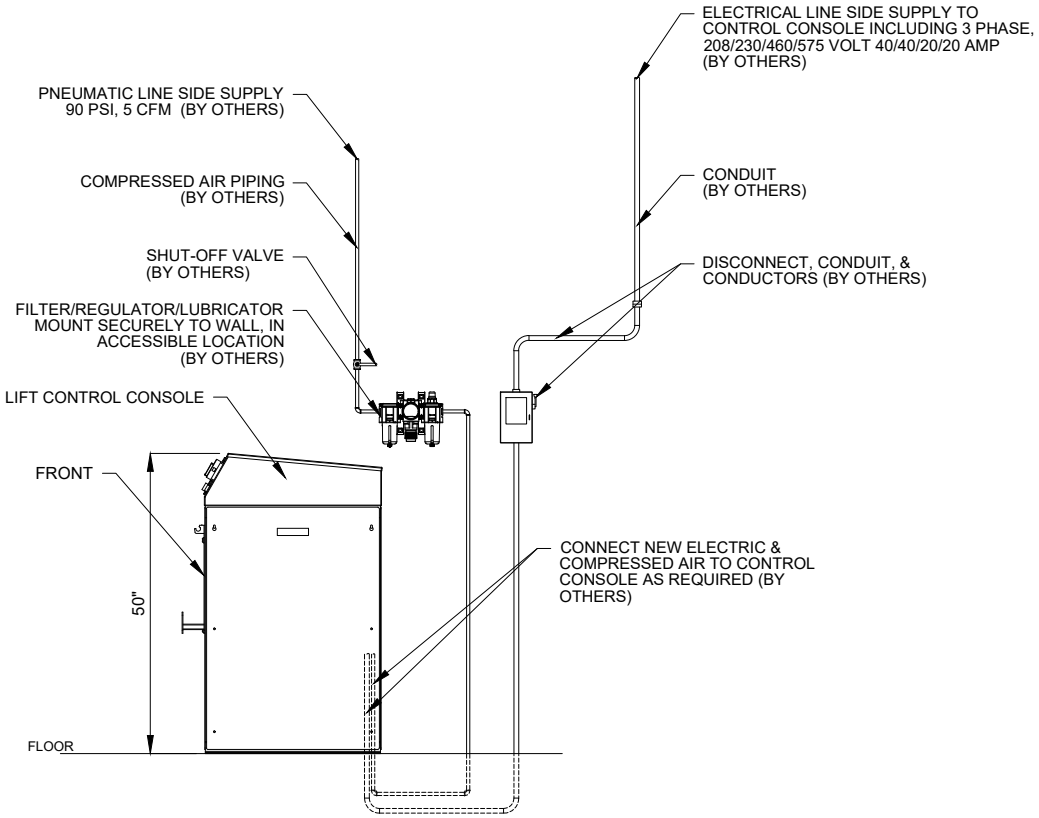

AIR & ELECTRICAL SERVICES AT CONSOLE

ebright CONTROL CONSOLE DETAILS

NOT FOR CONSTRUCTION

PRELIMINARY

APPROVED BY:	REVISIONS	PROJECT: Fargo Transit, ND	stertil KONI
SIGNATURE:		LIFT INSTALLER: D & J Equipment	STERTIL-KONI USA, INC. 200 LOG CANOE CIRCLE, STEVENSVILLE, MD 21666 TEL. 800-336-6637
PRINT NAME:		DESCRIPTION: ECO 60-13 RH 135-291 (CP)	DRAWN BY JGP 03/11/21 NOT TO SCALE
DATE:		SKU-2021-0311A-JGP-P00	CHECKED BY MML 03/11/21 SHEET 5 OF 7

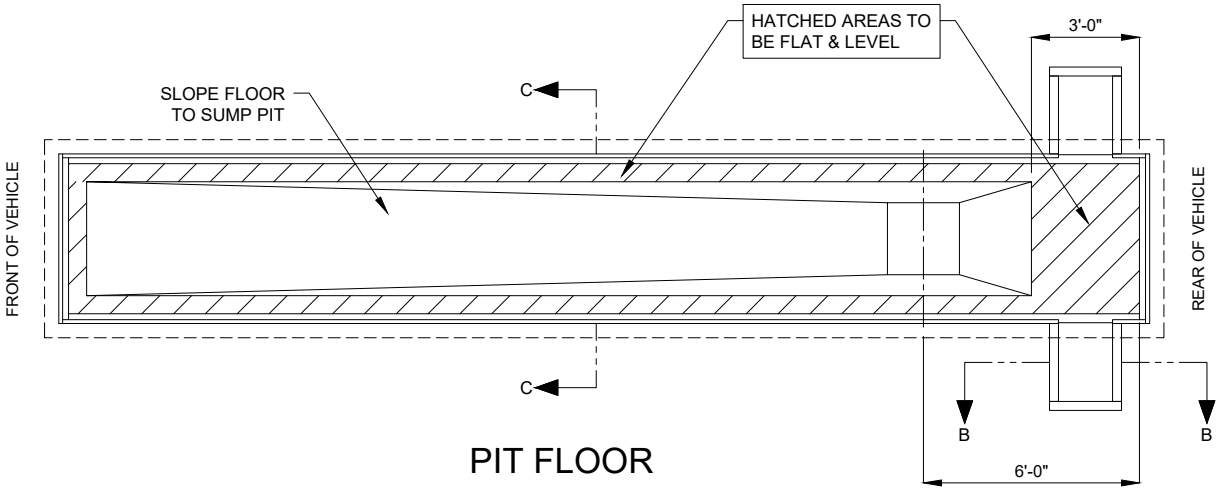

PIT FLOOR

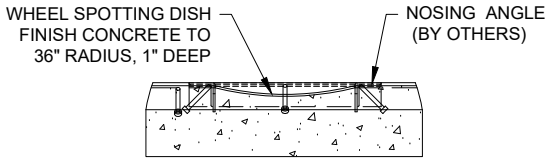

SECTION B - B
THROUGH WHEEL DISH

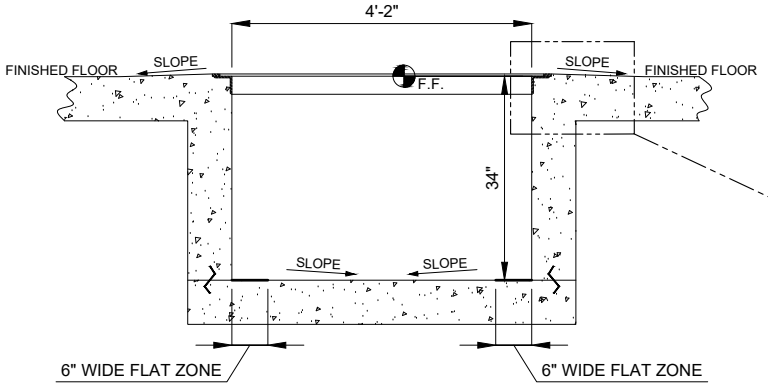

SECTION C - C
THROUGH PIT WALLS

SET THE ELEVATION OF THE FORM BAR LEVEL AND 3/8" ABOVE FINISHED FLOOR. SLOPE CONCRETE AWAY FROM FORM BAR DOWN TO F.F. ELEVATION. THE NOSING ANGLE BELOW THE FORM BAR WILL BE AT FINISHED FLOOR ELEVATION.

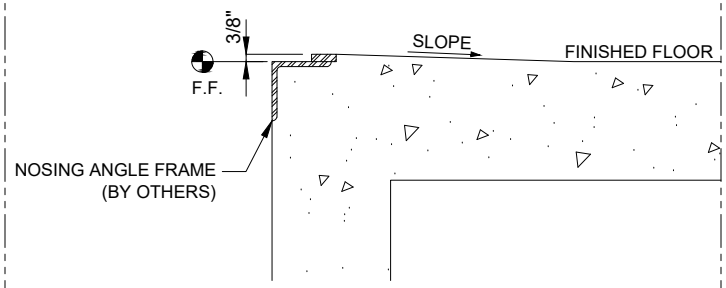

NOSING ANGLE DETAIL

PIT DETAILS

NOT FOR CONSTRUCTION

APPROVED BY:	REVISIONS	PROJECT: Fargo Transit, ND	stertil KONI
SIGNATURE:		LIFT INSTALLER: D & J Equipment	STERTIL-KONI USA, INC. 200 LOG CANOE CIRCLE, STEVENSVILLE, MD 21666 TEL. 800-336-6637
PRINT NAME:		DESCRIPTION: ECO 60-13 RH 135-291 (CP)	DRAWN BY JGP 03/11/21 NOT TO SCALE
DATE:		SKU-2021-0311A-JGP-P00	CHECKED BY MML 03/11/21 SHEET 6 OF 7

PRELIMINARY

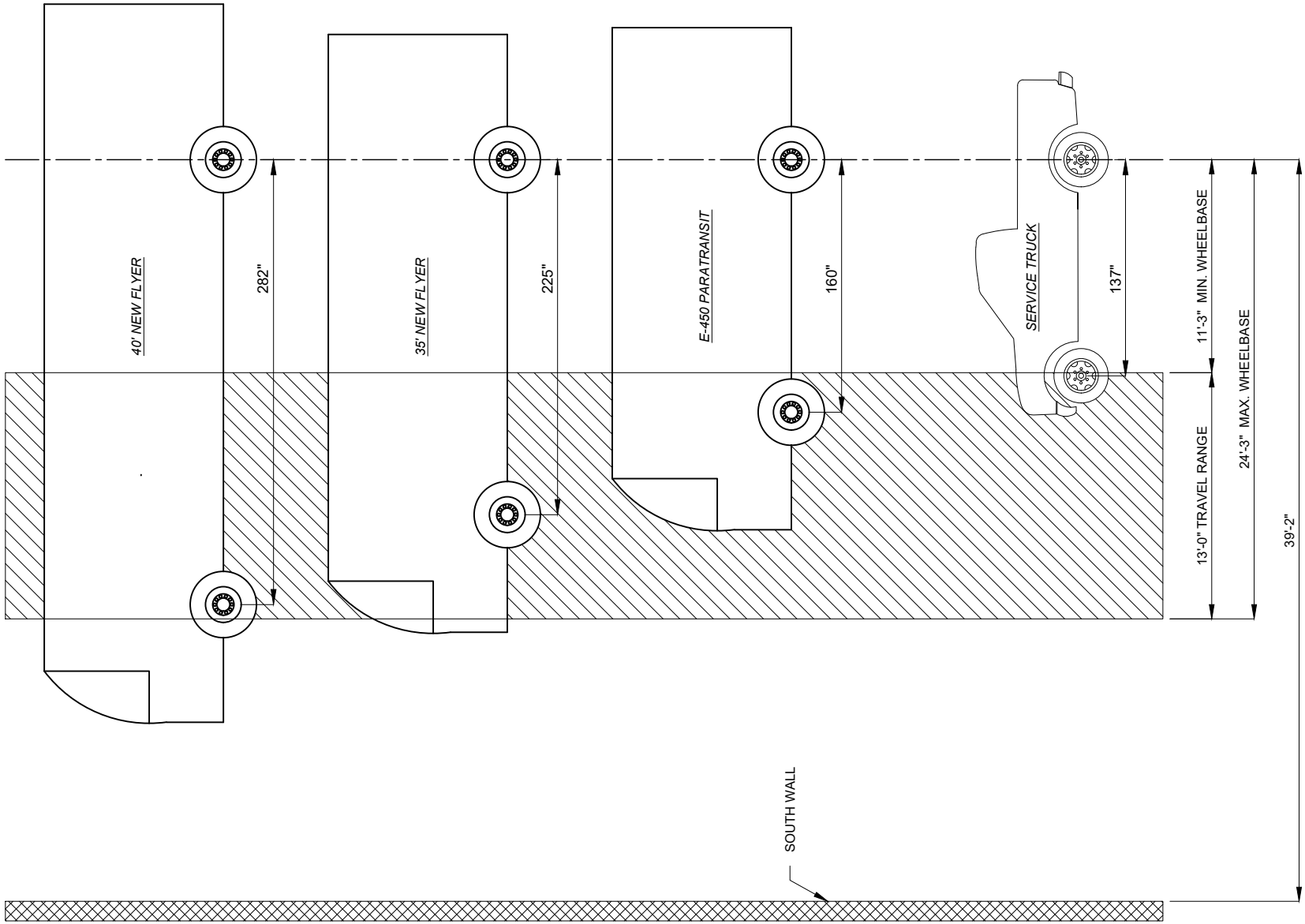

VEHICLE DIAGRAM

NOT FOR CONSTRUCTION

APPROVED BY:	REVISIONS	PROJECT:	Fargo Transit, ND
SIGNATURE:		LIFT INSTALLER:	D & J Equipment
PRINT NAME:		DESCRIPTION:	ECO 60-13 RH 135-291 (CP)
DATE:			SKU-2021-0311A-JGP-P00

PRELIMINARY

STERTIL-KONI USA, INC.
200 LOG CANOE CIRCLE, STEVENSVILLE, MD 21666
TEL. 800-336-6637

DRAWN BY	JGP	03/11/21	NOT TO SCALE
CHECKED BY	MML	03/11/21	SHEET 7 OF 7

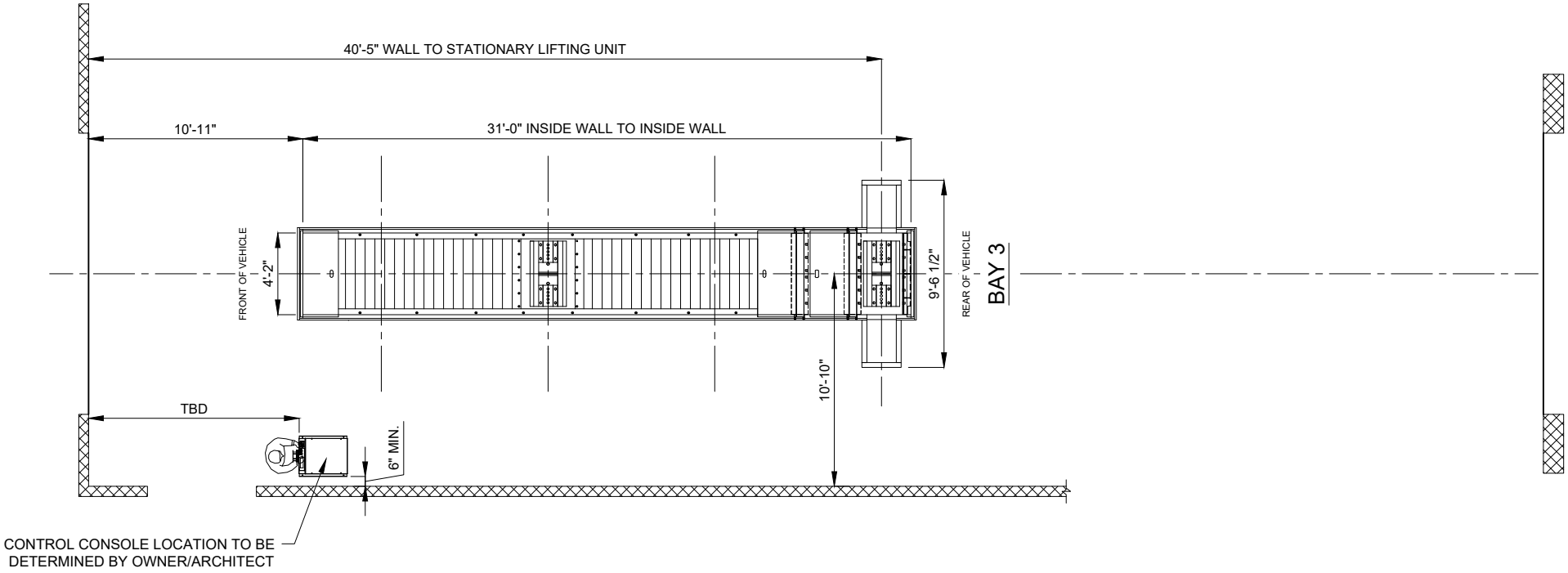

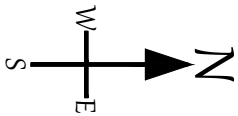

ECO IN BAY PLAN

NOT FOR CONSTRUCTION

PRELIMINARY

APPROVED BY:	REVISIONS	PROJECT: Fargo Transit, ND	stertil KONI
SIGNATURE:		LIFT INSTALLER: D & J Equipment	STERTIL-KONI USA, INC. 200 LOG CANOE CIRCLE, STEVENSVILLE, MD 21666 TEL. 800-336-6637
PRINT NAME:		DESCRIPTION: ECO 60-17 LH 102-306 (CP)	DRAWN BY: JGP 03/12/21 — NOT TO SCALE
DATE:		SKU-2021-0312A-JGP-P00	CHECKED BY: MML 03/12/21 — SHEET 1 OF 7

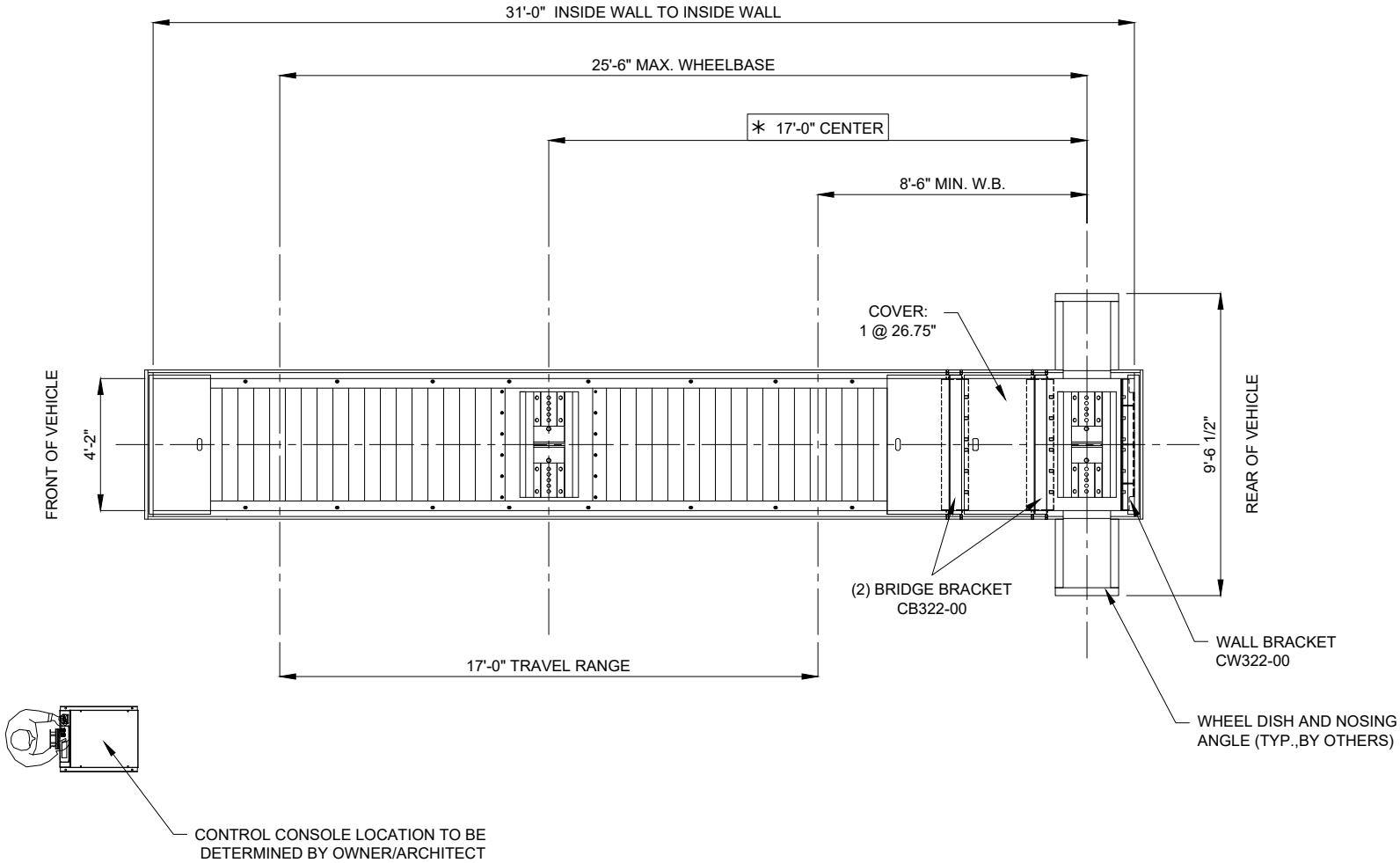

* CONTROL DIMENSION:
℄ OF STATIONARY LIFTING UNIT TO
℄ OF MOVABLE LIFTING UNIT

ECO PLAN

NOT FOR CONSTRUCTION

PRELIMINARY

APPROVED BY:	REVISIONS	PROJECT: Fargo Transit, ND	stertil KONI
SIGNATURE:		LIFT INSTALLER: D & J Equipment	STERTIL-KONI USA, INC. 200 LOG CANOE CIRCLE, STEVENSVILLE, MD 21666 TEL. 800-336-6637
PRINT NAME:		DESCRIPTION: ECO 60-17 LH 102-306 (CP)	DRAWN BY JGP 03/12/21 NOT TO SCALE
DATE:		SKU-2021-0312A-JGP-P00	CHECKED BY MML 03/12/21 SHEET 2 OF 7

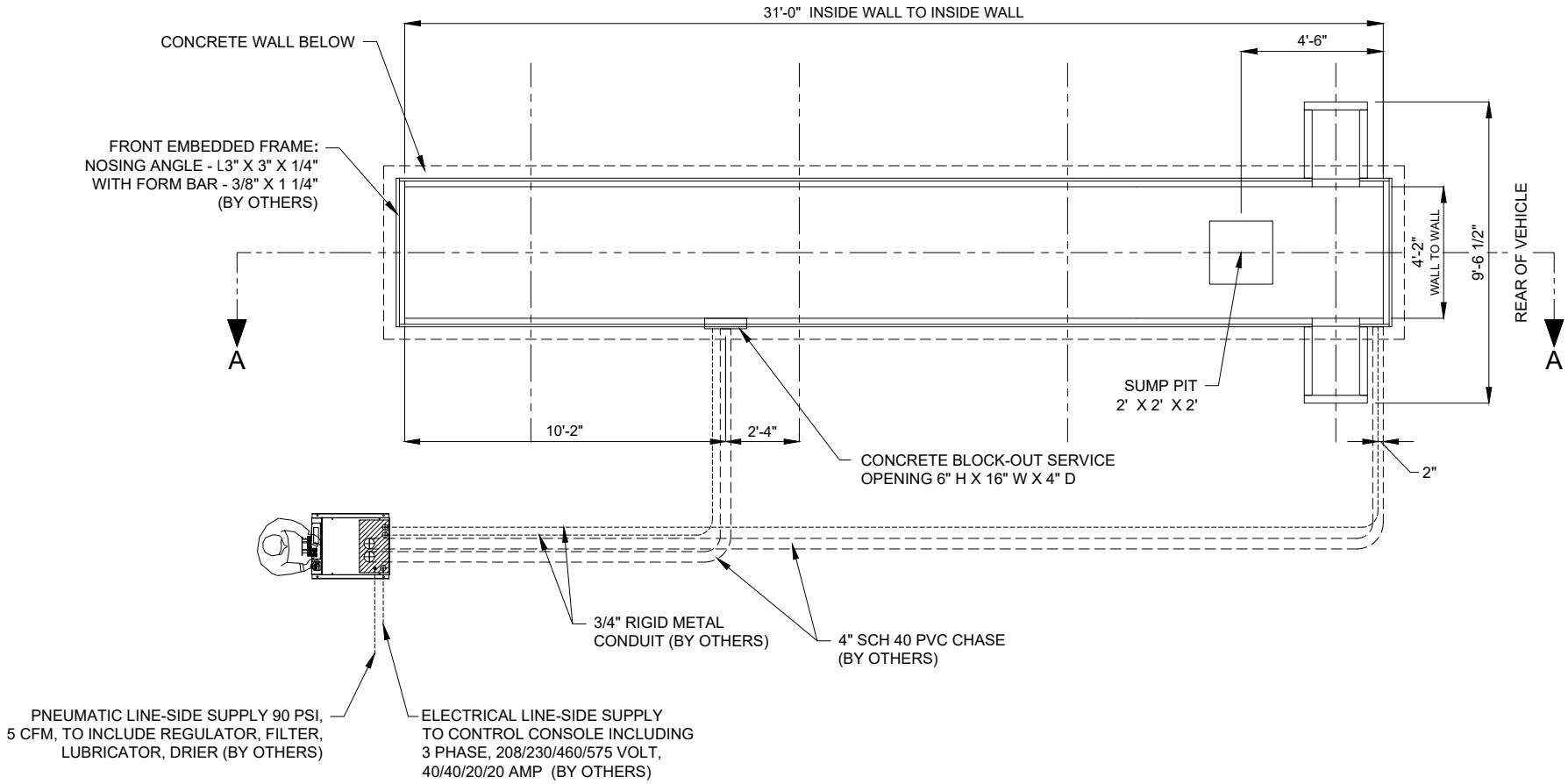

PIT & CONDUIT PLAN

NOT FOR CONSTRUCTION

PRELIMINARY

APPROVED BY:	REVISIONS	PROJECT: Fargo Transit, ND	stertil KONI
SIGNATURE:		LIFT INSTALLER: D & J Equipment	STERTIL-KONI USA, INC. 200 LOG CANOE CIRCLE, STEVENSVILLE, MD 21666 TEL. 800-336-6637
PRINT NAME:		DESCRIPTION: ECO 60-17 LH 102-306 (CP)	
DATE:		SKU-2021-0312A-JGP-P00	DRAWN BY JGP 03/12/21 NOT TO SCALE CHECKED BY MML 03/12/21 SHEET 3 OF 7

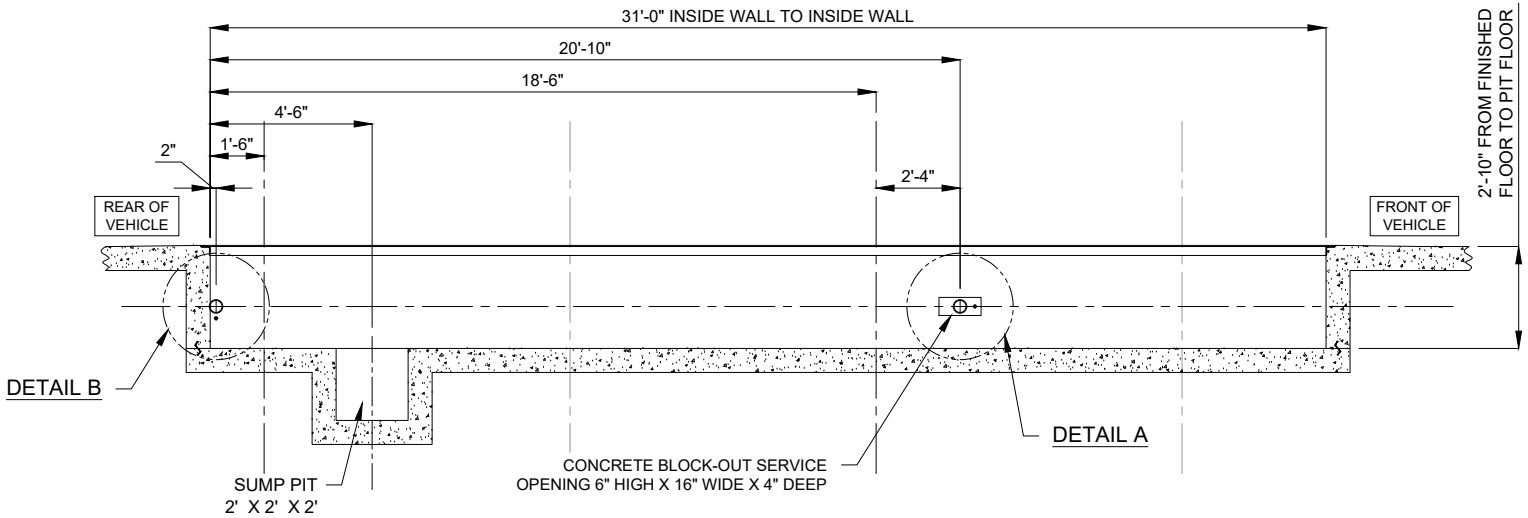

SECTION A--A LOOKING TOWARD CONTROL CONSOLE
(CONSOLE NOT SHOWN)

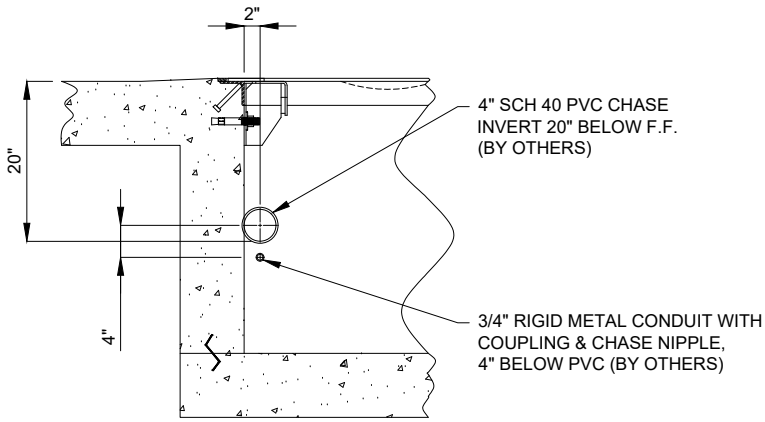

DETAIL B

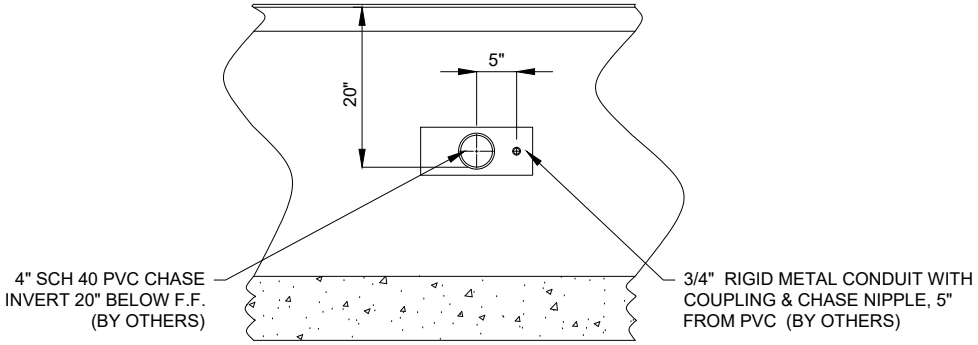

DETAIL A

ELEVATION DETAILS

NOT FOR CONSTRUCTION

PRELIMINARY

APPROVED BY:	REVISIONS	PROJECT: Fargo Transit, ND	stertil KONI
SIGNATURE:		LIFT INSTALLER: D & J Equipment	STERTIL-KONI USA, INC. 200 LOG CANOE CIRCLE, STEVENSVILLE, MD 21666 TEL. 800-336-6637
PRINT NAME:		DESCRIPTION: ECO 60-17 LH 102-306 (CP)	DRAWN BY: JGP 03/12/21 NOT TO SCALE
DATE:		SKU-2021-0312A-JGP-P00	CHECKED BY: MML 03/12/21 SHEET 4 OF 7

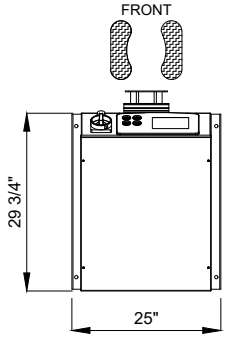

CONTROL CONSOLE

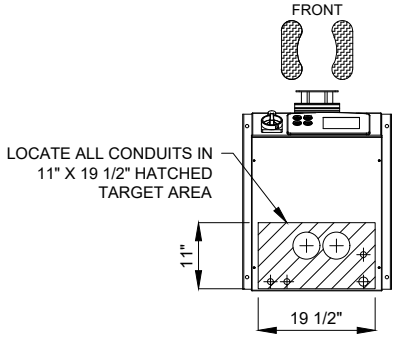

INTERNAL CONDUITS

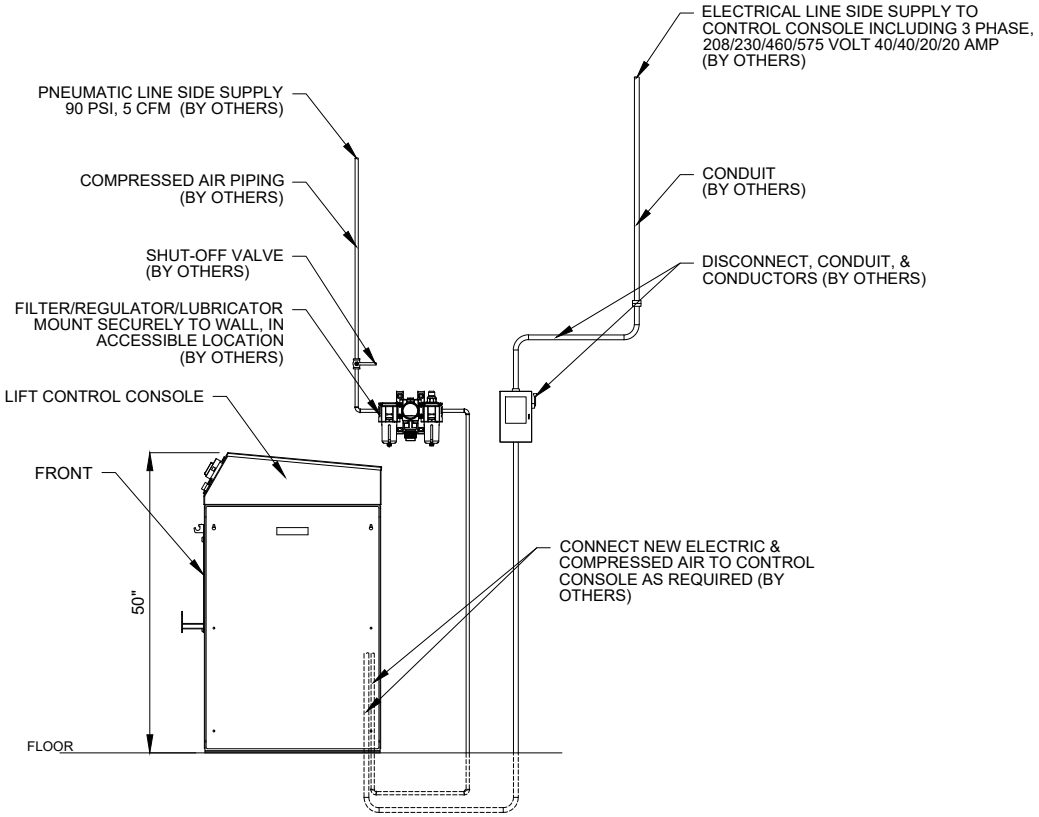

AIR & ELECTRICAL SERVICES AT CONSOLE

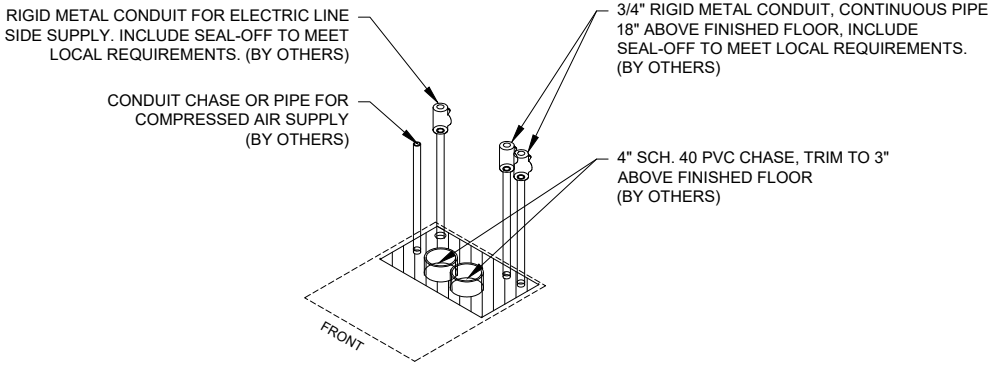

ISOMETRIC VIEW OF CONDUITS
AT CONTROL CONSOLE

ebright CONTROL CONSOLE DETAILS

NOT FOR CONSTRUCTION

PRELIMINARY

APPROVED BY:	REVISIONS	PROJECT: Fargo Transit, ND	stertil KONI
SIGNATURE:		LIFT INSTALLER: D & J Equipment	STERTIL-KONI USA, INC. 200 LOG CANOE CIRCLE, STEVENSVILLE, MD 21666 TEL. 800-336-6637
PRINT NAME:		DESCRIPTION: ECO 60-17 LH 102-306 (CP)	DRAWN BY: JGP 03/12/21 — NOT TO SCALE
DATE:		SKU-2021-0312A-JGP-P00	CHECKED BY: MML 03/12/21 — SHEET 5 OF 7

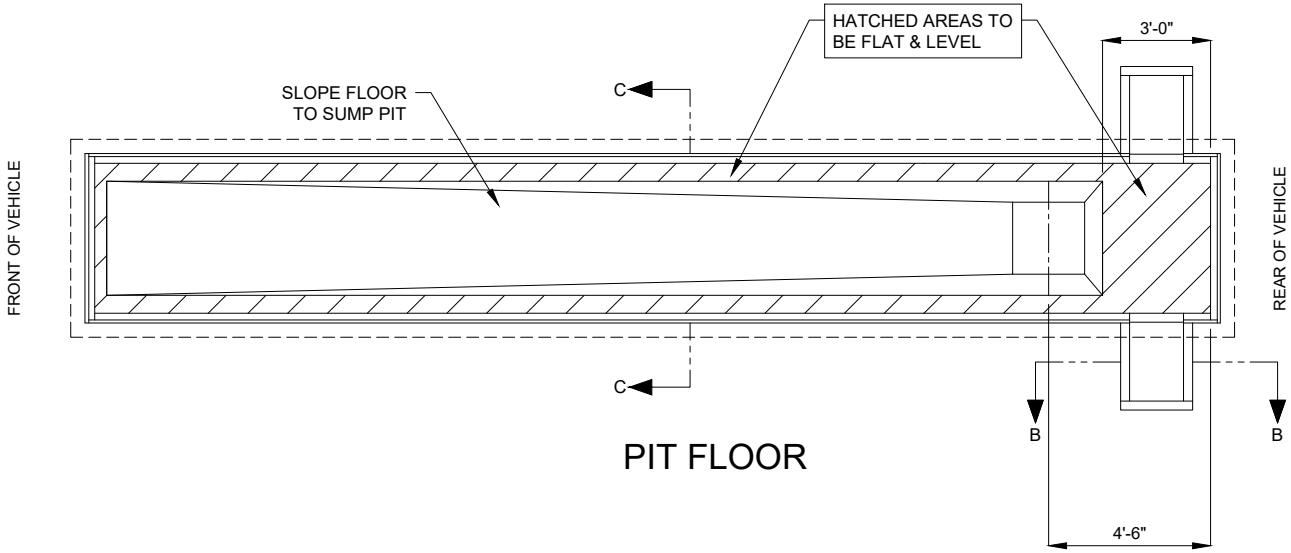

PIT FLOOR

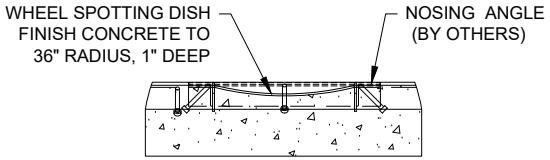

SECTION B - B
THROUGH WHEEL DISH

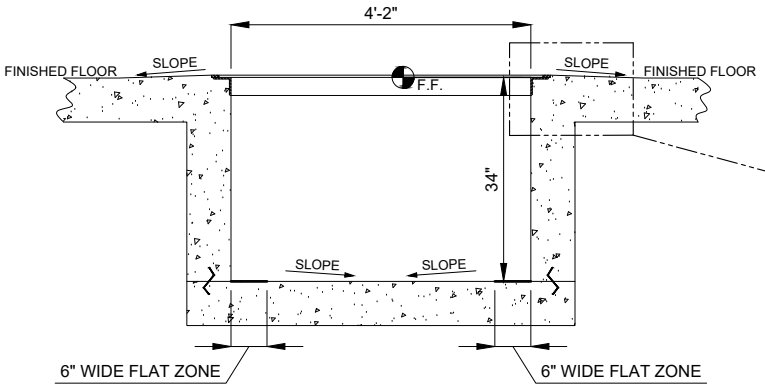

SECTION C - C
THROUGH PIT WALLS

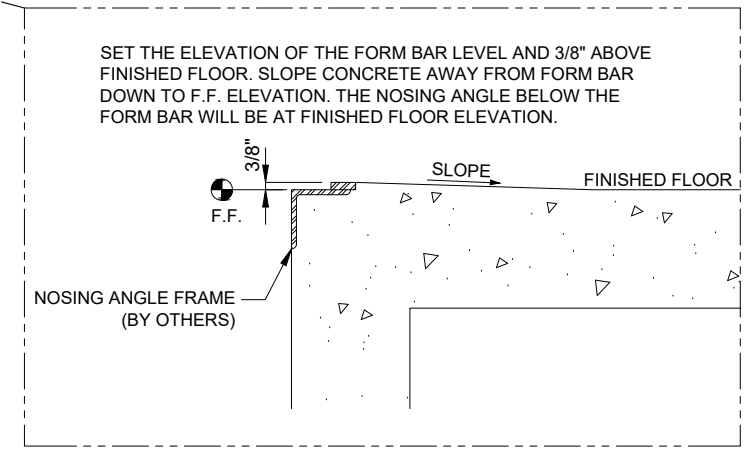

NOSING ANGLE DETAIL

PIT DETAILS

NOT FOR CONSTRUCTION

PRELIMINARY

APPROVED BY:	REVISIONS	PROJECT: Fargo Transit, ND	stertil KONI
SIGNATURE:		LIFT INSTALLER: D & J Equipment	STERTIL-KONI USA, INC. 200 LOG CANOE CIRCLE, STEVENSVILLE, MD 21666 TEL. 800-336-6637
PRINT NAME:		DESCRIPTION: ECO 60-17 LH 102-306 (CP)	DRAWN BY JGP 03/12/21 NOT TO SCALE
DATE:		SKU-2021-0312A-JGP-P00	CHECKED BY MML 03/12/21 SHEET 6 OF 7

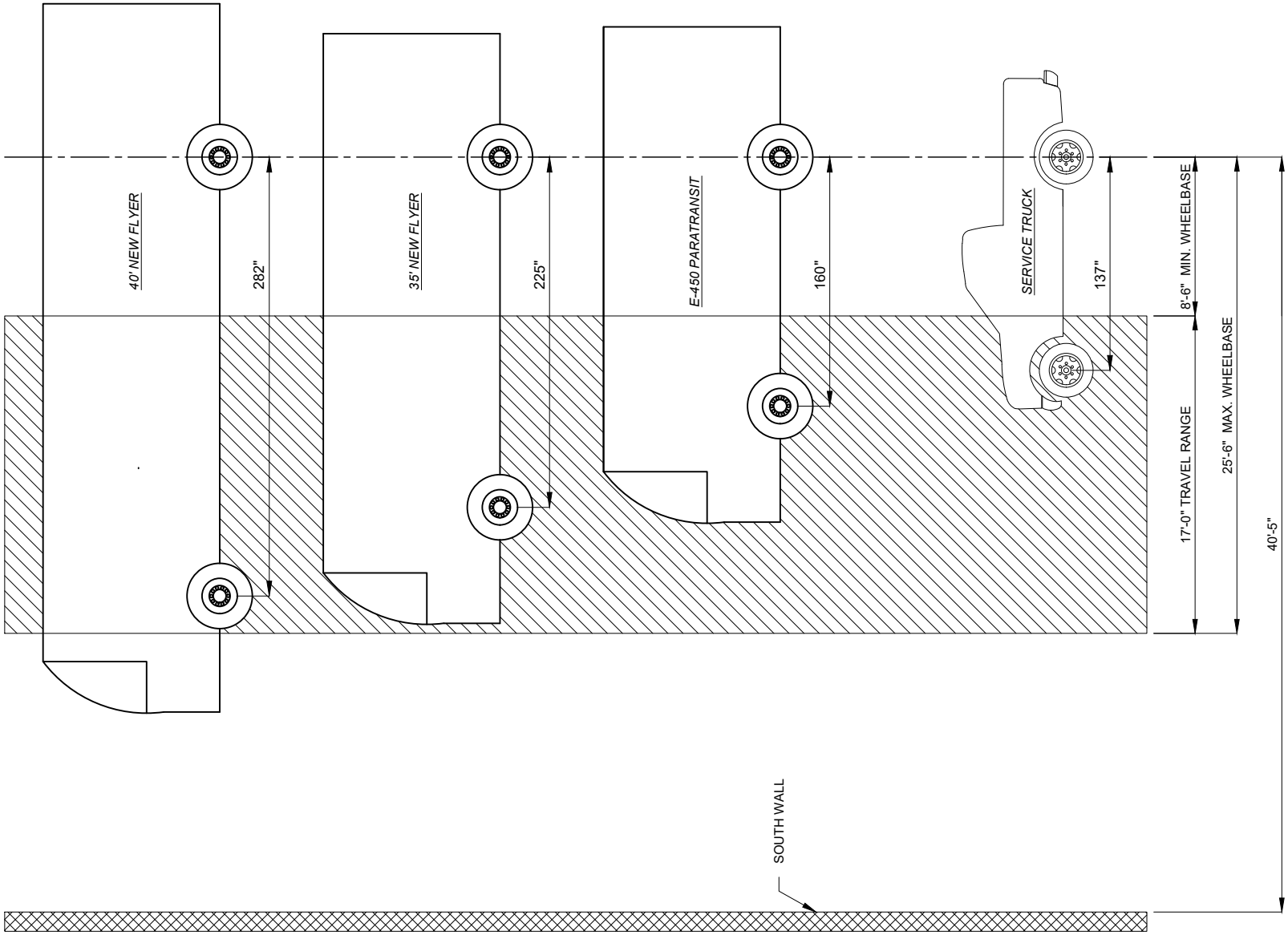

VEHICLE DIAGRAM

NOT FOR CONSTRUCTION

APPROVED BY:	REVISIONS	PROJECT:	Fargo Transit, ND
SIGNATURE:		LIFT INSTALLER:	D & J Equipment
PRINT NAME:		DESCRIPTION:	ECO 60-17 LH 102-306 (CP)
DATE:			SKU-2021-0312A-JGP-P00

PRELIMINARY

STERTIL-KONI USA, INC.
200 LOG CANOE CIRCLE, STEVENSVILLE, MD 21666
TEL. 800-336-6637

DRAWN BY	JGP	03/12/21	NOT TO SCALE
CHECKED BY	MML	03/12/21	SHEET 7 OF 7