FARGO CITY COMMISSION AGENDA
Monday, November 23, 2026 – 5:00 P.M.

Executive Session at 4:00 p.m.

Roll Call.

PLEASE NOTE: The Board of City Commissioners will convene in the City Commission Chambers at 4:00 p.m. and retire into Executive Session in the Red River Room for the purpose of discussing negotiating strategy and/or providing negotiating instructions to its attorney or other negotiator regarding ongoing negotiations regarding contract(s) with Kilbourne, LLC relating to the convention center project, which to discuss these matters in an open meeting will have a negative fiscal effect on the bargaining position of the City. Thus, an Executive Session for this matter is authorized pursuant to North Dakota Century Code 44-04-19.1, subsection 9 and North Dakota Century Code § 44-04-19.2, subsection 1.

Regular Meeting at 5:00 P.M.

City Commission meetings are broadcast live on TV Fargo Channel 56 and online at FargoND.gov/Streaming. They are rebroadcast Mondays at 5:00 p.m., Thursdays at 7:00 p.m. and Saturdays at 8:00 a.m. They are also included in the video archive at FargoND.gov/CityCommission.

A. Pledge of Allegiance.

B. Roll Call.

C. Approve Order of Agenda.

D. Minutes (Regular Meeting, November 9, 2026).

CONSENT AGENDA:

1. Application for Abatement or Refund of Taxes for property located at 1219 11th Street South requesting a reduction in value for 2026 from $150,300.00 to $94,000.00, 2025 from $150,000.00 to $82,900.00 and 2024 from $142,900.00 to $82,900.00.

2. Receive and file an Ordinance Amending Section 3-1303 and Enacting Sections 3-1308, 3-1309, 3-1310, 3-1311 and 3-1312 of Article 3-13 and Amending Section 3-1403 and Enacting Sections 3-1409, 3-1410, 3-1411, 3-1412 and 3-1413 of Article 3-14 of Chapter 3 of the Fargo Municipal Code Relating to Administration, Collection and Enforcement of City Lodging Taxes.

3. Receive and file an Ordinance Amending Article 13-14 of Chapter 13 of the Fargo Municipal Code Relating to Lodging Establishments.

4. 1st reading of an Ordinance Amending Section 38-0101 of Article 38-01 of Chapter 38 of the Fargo Municipal Code Relating to the Creation of City Street Lighting and Traffic Control Devices System.

5. 2nd reading, waive reading and final adoption of an Ordinance Enacting Section 8-1027 of Article 8-10 of Chapter 8 of the Fargo Municipal Code Relating to Winter Parking Restrictions and an Ordinance Amending Section 1-0305 of Article 1-03 of Chapter 1 of the

Fargo Municipal Code Relating to Classification of Ordinance Violations; 1st reading, 11/9/26.

6. Settlement Agreement and Release with J.D. Kraemer Enterprises, LLC for Project No. 2026-03 (WA2506).

7. Applications for Games of Chance.

8. Amendment No. 1 in the amount of $109,505.00 for Improvement District No. BR-28-E0.

9. Amendment No. 2 in the amount of $4,800.00 for Improvement District No. BR-26-G0.

10. Amendment No. 7 in the amount of -$83,346.07 for Improvement District No. BN-25-A0.

11. Negative Final Balancing Change Order No. 2 in the amount of -$65,330.97 for Improvement District No. BR-26-C1.

12. Negative Final Balancing Change Order No. 2 in the amount of -$12,924.12 for Improvement District No. PR-26-C1.

13. Negative Final Balancing Change Order No. 7 in the amount of -$81,578.37 for Improvement District No. BN-25-C1.

14. Bid award to Key Contracting, Inc. in the amount of $2,947,156.65 for Improvement District No. BR-27-C1.

15. Negative Final Balancing Change Order No. 3 in the amount of -$7,624.50 for Project No. TM-26-B1.

16. Negative Final Balancing Change Order No. 3 in the amount of -$23,913.00 for Project No. TM-25-B1.

17. Contract and bond for Project No. UR-26-H1.

18. Four-way stop controlled intersection at Elm Street and 21st Avenue North.

19. Consent to Construction Agreement with McCoy I-29 Properties, LLC for 3064 Thunder Road South.

20. Acknowledgement of Access Restrictions, Future Dedication and Waiver of Liability with Rodney and Susan Ballinger for 8800 25th Street South.

21. Bills.

22. Items from FAHR meeting:
    a. Memorandum of Understanding with the Downtown Community Partnership and Block 9 Plaza LLC.
    b. Transfer of funds from Red River Valley SWAT revenue accounts to the General Supplies expense account.

23. Resolution approving Plat of The Pines at the District Eighth Addition.

24. Bid award for the Water Reclamation Facility chemicals for 2027, as presented (ITB27010).

25. Easement (Temporary Construction Easement) with The Nordick Group, Inc. for Project No. SW 26-01.

26. Easement (Temporary Construction Easement) with ARD Properties, LLC for Project No. SW 26-01.

27. Bid award for the Water Treatment Plant chemicals for 2027, as presented (ITB27009).

REGULAR AGENDA (Public Hearings at 5:05 p.m.):

28. **PUBLIC HEARING** - Keeney & Devitt's Second Addition (220 6th Avenue North and 202, 208, 210 and 212 6th Avenue North); approval recommended by the Planning Commission on 8/4/26:
    a. Right of Way Vacation Plat (a vacation plat of a portion of public Right-of-Way (alley) within Block 31, Keeney & Devitt's Second Addition, bounded on the North by the Southerly Right-of-Way line of 6th Avenue North and bounded on the South by that part of said alley previously vacated by Cityside Addition to the City of Fargo).

29. Application for Abatement or Refund of Taxes #4673 for property located at 6707 54th Avenue South requesting a reduction in value for 2026 from $691,200.00 to $629,300.00; staff is recommending to retain the value for 2026.

30. Recommendations for Federal Aid Transportation Alternatives Project Applications for 2031.

31. Proposed 2027 MATBUS staffing reorganization.

32. Receive and file an Ordinance Enacting Article 3-25 of Chapter 3 of the Fargo Municipal Code Relating to a Motor Vehicle Rental Tax.

33. Liaison Commissioner assignment updates.

34. **PUBLIC COMMENTS (2.5 minutes will be offered for comment with a maximum of 30 minutes total for all public comments. Individuals who would like to address the Commission, whether virtually or in person, must sign-up here).**

People with disabilities who plan to attend the meeting and need special accommodations should contact the Commission Office at 701.241.1310 at least 48 hours before the meeting to give staff adequate time to make arrangements.

Minutes are available on the City of Fargo web site at FargoND.gov/CityCommission.

THE CITY OF Fargo FAR MORE

1

ASSESSOR'S OFFICE
Fargo City Hall
225 4th Street North
Fargo, ND 58102
Phone: 701.241.1340 | Fax: 701.241.1339
www.FargoND.gov

November 17, 2026

Board of City Commissioners
City Hall
Fargo, ND 58102

Dear Commissioners:

Attached are the Applications for Abatement or Refund of Taxes. The applications are for a residence located at 1219 11th St S. The application(s) request reductions for the following:

2024 – from $142,900 to $82,900
2025 – from $150,000 to $82,900
2026 – from $150,300 to $94,000

The applicant has waived the city hearing on this application.

We have provided information regarding the valuation of this property and the reasons for a value adjustment. With the information provided by the owner and our staff appraiser's review and based on the current conditions and issues of the property, we think a reduction is well supported.

SUGGESTED MOTION:

Approve reductions and change the certified assessment values for 1219 11 St S as follows:

#4674 – Reduce the 2024 certified value to $82,900
#4675 – Reduce the 2025 certified value to $82,900
#4676 – Reduce the 2026 certified value to $94,000

Sincerely,

Michael Splonskowski

Michael Splonskowski
Fargo City Assessor

Appeal of Property Tax Assessment

City of Fargo Staff Report

General Appeal Information

Tax Year:	2024, 2025, 2026
Filed Via:	Abatement #4674, 4675, 4676
Parcel Number:	01-0780-01760-000
Address:	1219 11th St S
Owner Name:	Joseph & Shirley Manning Trust
Appellant:	Sue Kersting, Trustee
Requested Value:	$82,900 - 2024, $82,900 - 2025, $94,000 - 2026

Subject Property



Property Type:	Single Family
Story Height:	Two Story
Year Built:	1926
Size (SF):	1,248 sf
Transaction History:	*No Recent Sales*

Appeal Summary

This 2024, 2025 and 2026 values of this property have been appealed due to a reduction in value in 2027, as part of our normal reappraisal. The owner contends that value was overstated by our office, due to inaccurate condition classification, and is looking for a reduction.

City of Fargo Staff Analysis

The house has been vacant since 2000. This property was viewed by appraisal staff in the fall of 2026. The property was found to be unlivable and had extensive water damage and deterioration. The condition was downgraded to poor at that time.

Assessment Fairness

To test for assessment fairness, we compare the true and full value to that of similar properties in poor condition. We identified 6 similar properties in poor condition over the three-year span. Comparably assessed properties ranged from $48/SF to $89/SF, with a median of $66/SF. This list is available from our work file upon request.

Valuation Accuracy

We tested the accuracy of the true and full value by studying comparable sale prices. There are limited sales of similar properties, and most of them are not considered arms-length transactions because of the conditions, but the following properties are in poor condition and are comparable to the subject. Comparable sales range from $41/SF to $69/SF, with the median sales price at $66/SF. The subject was valued higher than the median sale price.

Address	Year Built	Size (SF)	Sale Date	Sale Price (w/ SPUN)	Price / SF	
1108 18 St N	1928	1026	2025-11-20	70900	$69.10	
910 University Dr S	1922	1207	2025-08-08	80060	$ 66.33	
909 4 St N	1916	1549	2025-03-12	64080	$41.37	
Subject	**1926**	**1,248**	**Original**	$ 142,900	$ 115	**2024**
			Recommended	**$82,900**	**$ 66**	
				$150,000	$120	**2025**
				$82,900	**$66**	
				$150,300	$120	**2026**
				$94,000	**$75**	

Conclusion

We agree that the subject's value was overstated. The sales show a median sale price of $66/SF and comparably assessed properties are valued at a median of $66/SF. The condition of the property makes the value much lower than the assessment for these years and was in effect at the time of the assessment date. The difference in value for 2026 reflects a land value change, while the improvement value remains the same.

Recommended Action:

Approve the value reductions and change assessment values as proposed:

#4674 - $82.900 - 2024

#4675 - $82,900 - 2025

#4676 – $94,000 - 2026

Information provided above is a summary of the analysis conducted. Full analysis is provided in the Assessment Department's work file.

RECEIVED

NOV 02 2026

FARGO ASSESSOR

Application For Abatement Or Refund Of Taxes

North Dakota Century Code § 57-23-04

RECEIVED
CASS CO AUDITOR
JUL 29 2026 PM 2:54

File with the County Auditor on or before November 1 of the year following the year in which the tax becomes delinquent.

State of North Dakota

Assessment District: City of Fargo

County of: Cass

Property I.D. No.: 01-0780-01760-000

Name: Joseph & Shirley Manning Trust : Sue Kersting-Trustee

Telephone No.: [redacted]

Address: 1219 11th St S. Fargo, ND 58103

Sue Kersting
161 - 5th Ave N
Kindred, ND 58051

Legal description of the property involved in this application:

home and lot at the above listed property has not been lived in for almost 20 years

Total true and full value of the property described above for the year 2024 is:

Land	$ 38,700
Improvements	$ 104,200
Total	$ 142,900 (1)

Total true and full value of the property described above for the year 2024 should be:

Land	$ 38,700
Improvements	$ 44,200
Total	$ 82,900 (2)

The difference of $ 60,000.00 true and full value between (1) and (2) above is due to the following reason(s):

- ☐ 1. Agricultural property true and full value exceeds its agricultural value defined in N.D.C.C. § 57-02-27.2
- ☐ 2. Residential or commercial property's true and full value exceeds the market value
- ☐ 3. Error in property description, entering the description, or extending the tax
- ☐ 4. Nonexisting improvement assessed
- ☐ 5. Complainant or property is exempt from taxation. Attach a copy of Application for Property Tax Exemption.
- ☐ 6. Duplicate assessment
- ☐ 7. Property improvement was destroyed or damaged by fire, flood, tornado, or other natural disaster (see N.D.C.C. § 57-23-04(1)(g))
- ☐ 8. Error in noting payment of taxes, taxes erroneously paid
- ☐ 9. Property qualifies for Homestead Credit (N.D.C.C. § 57-02-08.1) or Disabled Veterans Credit (N.D.C.C. § 57-02-08.8). Attach a copy of the application.
- ☑ 10. Other (explain) vacant home without working heat or water

The following facts relate to the market value of the residential or commercial property described above. For agricultural property, go directly to question #5.

1. Purchase price of property: $_____ Date of purchase: _____
   Terms: Cash _____ Contract _____ Trade _____ Other (explain) _____
   Was there personal property involved in the purchase price? _____ (yes/no) Estimated value: $_____
2. Has the property been offered for sale on the open market? _____ (yes/no). If yes, how long? _____
   Asking price: $_____ Terms of sale: _____
3. The property was independently appraised: _____ (yes/no) Purpose of appraisal: _____
   _____ Market value estimate: $_____
   Appraisal was made by whom? _____
4. The applicant's estimate of market value of the property involved in this application is $_____
5. The estimated agricultural productive value of this property is excessive because of the following condition(s): _____

Applicant asks that Taxes be reduced to reflect the limited value of the home

By filing this application, I consent to an inspection of the above-described property by an authorized assessment official for the purpose of making an appraisal of the property. I understand the official will give me reasonable notification of the inspection. See N.D.C.C. § 57-23-05.1.

I declare under the penalties of N.D.C.C. § 12.1-11-02, which provides for a Class A misdemeanor for making a false statement in a governmental matter, that this application is, to the best of my knowledge and belief, a true and correct application.

Signature of Preparer (if other than applicant) _____ Date _____ Signature of Applicant _____ Date _____

24778
(2-2016)

Recommendation of the Governing Body of the City or Township

Recommendation of the governing board of _____

On _____, _____, the governing board of this municipality, after examination of this application and the facts, passed a resolution recommending to the Board of County Commissioners that the application be _____

_____

_____

_____

Dated this _____ day of _____, _____.

_____
City Auditor or Township Clerk

Action by the Board of County Commissioners

Application was _____ by action of _____ County Board of Commissioners.
Approved/Rejected

Based upon an examination of the facts and the provisions of North Dakota Century Code § 57-23-04, we approve this application. The taxable valuation is reduced from $ _____ to $ _____ and the taxes are reduced accordingly. The taxes, if paid, will be refunded to the extent of $ _____. The Board accepts $ _____ in full settlement of taxes for the tax year _____.

We reject this application in whole or in part for the following reason(s). Written explanation of the rationale for the decision must be attached. _____

_____

_____

_____

Dated _____, _____

_____ _____
County Auditor Chairperson

Certification of County Auditor

I certify that the Board of County Commissioners took the action stated above and the records of my office and the office of the County Treasurer show the following facts as to the assessment and the payment of taxes on the property described in this application.

Year	Taxable Value	Tax	Date Paid (if paid)	Payment Made Under Written Protest?
				yes/no

I further certify that the taxable valuation and the taxes ordered abated or refunded by the Board of County Commissioner are as follows:

Year	Reduction in Taxable Valuation	Reduction in Taxes

_____ _____
County Auditor Date

Application For Abatement Or Refund Of Taxes

Name of Applicant Joseph & Shirley Manning Trust

County Auditor's File No. 4674

Date Application Was Filed With The County Auditor 10/29/2016

Date County Auditor Mailed Application to Township Clerk or City Auditor 10/29/2016
(must be within five business days of filing date)

RECEIVED
NOV 02 2026
FARGO ASSESSOR

Application For Abatement Or Refund Of Taxes

North Dakota Century Code § 57-23-04

File with the County Auditor on or before November 1 of the year following the year in which the tax becomes delinquent.

State of North Dakota

County of Cass

Assessment District City of Fargo

Property I.D. No. 01-0780-01760-000

Name Joseph & Shirley Manning Trust : Sue Kersting-Trustee

Telephone No. [redacted]

Address 1219 11th St S, Fargo, ND 58103

Legal description of the property involved in this application:

home and lot at the above listed property has not been lived in for almost 20 years

Sue Kersting
161 - 5th Ave. N.
Kindred, ND 58051

Total true and full value of the property described above for the year 2025 is:		Total true and full value of the property described above for the year 2025 should be:	
Land	$ 38,700	Land	$ 38,700
Improvements	$ 111,300	Improvements	$ 44,200
Total	$ 150,000 (1)	Total	$ 82,900 (2)

The difference of $ 67,100.00 true and full value between (1) and (2) above is due to the following reason(s):

- ☐ 1. Agricultural property true and full value exceeds its agricultural value defined in N.D.C.C. § 57-02-27.2
- ☐ 2. Residential or commercial property's true and full value exceeds the market value
- ☐ 3. Error in property description, entering the description, or extending the tax
- ☐ 4. Nonexisting improvement assessed
- ☐ 5. Complainant or property is exempt from taxation. Attach a copy of Application for Property Tax Exemption.
- ☐ 6. Duplicate assessment
- ☐ 7. Property improvement was destroyed or damaged by fire, flood, tornado, or other natural disaster (see N.D.C.C. § 57-23-04(1)(g))
- ☐ 8. Error in noting payment of taxes, taxes erroneously paid
- ☐ 9. Property qualifies for Homestead Credit (N.D.C.C. § 57-02-08.1) or Disabled Veterans Credit (N.D.C.C. § 57-02-08.8). Attach a copy of the application.
- ☑ 10. Other (explain) vacant home without working heat or water

The following facts relate to the market value of the residential or commercial property described above. For agricultural property, go directly to question #5.

1. Purchase price of property: $_____ Date of purchase: _____
   Terms: Cash _____ Contract _____ Trade _____ Other (explain) _____
   Was there personal property involved in the purchase price? _____ (yes/no) Estimated value: $_____
2. Has the property been offered for sale on the open market? _____ (yes/no). If yes, how long? _____
   Asking price: $_____ Terms of sale: _____
3. The property was independently appraised: _____ (yes/no) Purpose of appraisal: _____
   _____ Market value estimate: $_____
   Appraisal was made by whom? _____
4. The applicant's estimate of market value of the property involved in this application is $_____
5. The estimated agricultural productive value of this property is excessive because of the following condition(s): _____

Applicant asks that Taxes be reduced to reflect the limited value of the home

By filing this application, I consent to an inspection of the above-described property by an authorized assessment official for the purpose of making an appraisal of the property. I understand the official will give me reasonable notification of the inspection. See N.D.C.C. § 57-23-05.1.

I declare under the penalties of N.D.C.C. § 12.1-11-02, which provides for a Class A misdemeanor for making a false statement in a governmental matter, that this application is, to the best of my knowledge and belief, a true and correct application.

Signature of Preparer (if other than applicant) _____ Date _____ Signature of Applicant _____ Date _____

24775
(2-2016)

Recommendation of the Governing Body of the City or Township

Recommendation of the governing board of _____

On _____, _____, the governing board of this municipality, after examination of this application and the facts, passed a resolution recommending to the Board of County Commissioners that the application be _____

_____

_____

_____

Dated this _____ day of _____, _____.

_____
City Auditor or Township Clerk

Action by the Board of County Commissioners

Application was _____ by action of _____ County Board of Commissioners.
Approved/Rejected

Based upon an examination of the facts and the provisions of North Dakota Century Code § 57-23-04, we approve this application. The taxable valuation is reduced from $ _____ to $ _____ and the taxes are reduced accordingly. The taxes, if paid, will be refunded to the extent of $ _____. The Board accepts $ _____ in full settlement of taxes for the tax year _____.

We reject this application in whole or in part for the following reason(s). Written explanation of the rationale for the decision must be attached. _____

_____

_____

_____

Dated _____, _____

_____ _____
County Auditor Chairperson

Certification of County Auditor

I certify that the Board of County Commissioners took the action stated above and the records of my office and the office of the County Treasurer show the following facts as to the assessment and the payment of taxes on the property described in this application.

Year	Taxable Value	Tax	Date Paid (if paid)	Payment Made Under Written Protest?
				yes/no

I further certify that the taxable valuation and the taxes ordered abated or refunded by the Board of County Commissioner are as follows:

Year	Reduction in Taxable Valuation	Reduction in Taxes

_____ _____
County Auditor Date

Application For Abatement Or Refund Of Taxes

Name of Applicant: Joseph & Shirley Manning Trust

County Auditor's File No. 4675

Date Application Was Filed With The County Auditor: 10/29/16

Date County Auditor Mailed Application to Township Clerk or City Auditor: 10/29/16
(must be within five business days of filing date)

RECEIVED
NOV 02 2026
FARGO ASSESSOR

RECEIVED
CASS CO AUDITOR
OCT 29 2026 PM02:54

Application For Abatement Or Refund Of Taxes

North Dakota Century Code § 57-23-04

File with the County Auditor on or before November 1 of the year following the year in which the tax becomes delinquent.

State of North Dakota

Assessment District: City of Fargo

County of: Cass

Property I.D. No.: 01-0780-01760-000

Name: Joseph & Shirley Manning Trust : Sue Kersting-Trustee

Telephone No.: [redacted]

Address: 1219 11th St S, Fargo, ND 58103

Sue Kersting
161-5th Ave N.
Kindred, ND
58051

Legal description of the property involved in this application:

home and lot at the above listed property has not been lived in for almost 20 years

Total true and full value of the property described above for the year 2026 is:

Land	$ 49,800
Improvements	$ 100,500
Total	$ 150,300 (1)

Total true and full value of the property described above for the year 2025 should be:

Land	$ 49,800
Improvements	$ 44,200
Total	$ 94,000 (2)

The difference of $ 56,300.00 true and full value between (1) and (2) above is due to the following reason(s):

- ☐ 1. Agricultural property true and full value exceeds its agricultural value defined in N.D.C.C. § 57-02-27.2
- ☐ 2. Residential or commercial property's true and full value exceeds the market value
- ☐ 3. Error in property description, entering the description, or extending the tax
- ☐ 4. Nonexisting improvement assessed
- ☐ 5. Complainant or property is exempt from taxation. Attach a copy of Application for Property Tax Exemption.
- ☐ 6. Duplicate assessment
- ☐ 7. Property improvement was destroyed or damaged by fire, flood, tornado, or other natural disaster (see N.D.C.C. § 57-23-04(1)(g))
- ☐ 8. Error in noting payment of taxes, taxes erroneously paid
- ☐ 9. Property qualifies for Homestead Credit (N.D.C.C. § 57-02-08.1) or Disabled Veterans Credit (N.D.C.C. § 57-02-08.8). Attach a copy of the application.
- ☑ 10. Other (explain) vacant home without working heat or water

The following facts relate to the market value of the residential or commercial property described above. For agricultural property, go directly to question #5.

1. Purchase price of property: $_____ Date of purchase: _____
   Terms: Cash _____ Contract _____ Trade _____ Other (explain) _____
   Was there personal property involved in the purchase price? _____ (yes/no) Estimated value: $_____
2. Has the property been offered for sale on the open market? _____ (yes/no). If yes, how long? _____
   Asking price: $_____ Terms of sale: _____
3. The property was independently appraised: _____ (yes/no) Purpose of appraisal: _____
   _____ Market value estimate: $_____
   Appraisal was made by whom? _____
4. The applicant's estimate of market value of the property involved in this application is $_____
5. The estimated agricultural productive value of this property is excessive because of the following condition(s): _____

Applicant asks that Taxes be reduced to reflect the limited value of the home

By filing this application, I consent to an inspection of the above-described property by an authorized assessment official for the purpose of making an appraisal of the property. I understand the official will give me reasonable notification of the inspection. See N.D.C.C. § 57-23-05.1.

I declare under the penalties of N.D.C.C. § 12.1-11-02, which provides for a Class A misdemeanor for making a false statement in a governmental matter, that this application is, to the best of my knowledge and belief, a true and correct application.

Signature of Preparer (if other than applicant) _____ Date _____ Signature of Applicant _____ Date _____

24775
(2-2016)

Recommendation of the Governing Body of the City or Township

Recommendation of the governing board of _____

On _____, _____, the governing board of this municipality, after examination of this application and the facts, passed a resolution recommending to the Board of County Commissioners that the application be _____

_____

_____

_____

Dated this _____ day of _____, _____.

_____
City Auditor or Township Clerk

Action by the Board of County Commissioners

Application was _____ by action of _____ County Board of Commissioners.
Approved/Rejected

Based upon an examination of the facts and the provisions of North Dakota Century Code § 57-23-04, we approve this application. The taxable valuation is reduced from $ _____ to $ _____ and the taxes are reduced accordingly. The taxes, if paid, will be refunded to the extent of $ _____. The Board accepts $ _____ in full settlement of taxes for the tax year _____.

We reject this application in whole or in part for the following reason(s). Written explanation of the rationale for the decision must be attached. _____

_____

_____

_____

Dated _____, _____

_____
County Auditor

_____
Chairperson

Certification of County Auditor

I certify that the Board of County Commissioners took the action stated above and the records of my office and the office of the County Treasurer show the following facts as to the assessment and the payment of taxes on the property described in this application.

Year	Taxable Value	Tax	Date Paid (if paid)	Payment Made Under Written Protest?
				yes/no

I further certify that the taxable valuation and the taxes ordered abated or refunded by the Board of County Commissioner are as follows:

Year	Reduction in Taxable Valuation	Reduction in Taxes

_____ _____
County Auditor Date

Application For Abatement Or Refund Of Taxes

Name of Applicant Joseph Shirley Manning Trust

County Auditor's File No. 46 70

Date Application Was Filed With The County Auditor 10/29/20

Date County Auditor Mailed Application to Township Clerk or City Auditor 10/29/20
(must be within five business days of filing date)

THE CITY OF Fargo FAR MORE

OFFICE OF THE CITY ATTORNEY

CITY ATTORNEY
Ian R. McLean

SERKLAND LAW FIRM
10 Roberts Street North
Fargo, ND 58102
Phone: 701.232.8957 | Fax: 701.237.4049

ASSISTANT CITY ATTORNEYS
Alissa R. Farol Czapiewski • William B. Wischer
• Kasey D. McNary • Elijah P. Hartsell

2

November 19, 2026

Board of City Commissioners
225 Fourth Street North
Fargo, ND 58102

Re: Proposed Ordinance Amending Articles 3-13 and 3-14 of the Fargo Municipal Code – Lodging Tax Administration and Enforcement.

Dear Mayor and Commissioners:

At its October 12, 2026, meeting, the City Commission directed the City Attorney's Office to review the City's lodging tax ordinances relating to collection and enforcement. Pursuant to that direction, enclosed for your review is a proposed ordinance amending Articles 3-13 and 3-14 of the Fargo Municipal Code.

Fargo is responsible for directly collecting and administering its own lodging taxes rather than having the North Dakota State Tax Commissioner perform those functions. By administering these taxes locally, Fargo avoids the three percent (3%) administrative fee that would otherwise be retained by the State Tax Commissioner. However, because the City is responsible for collecting these taxes, it is important that the City have appropriate enforcement mechanisms similar to those available to the State Tax Commissioner when administering and collecting taxes.

The proposed ordinance strengthens the City's enforcement authority and establishes consistent requirements for both the existing three percent (3%) lodging tax under Article 3-13 and the additional three percent (3%) convention center lodging tax under Article 3-14.

The principal changes include:

- **Records and Audits.** Expressly authorizes the City Auditor to examine and audit lodging operators' records to verify the accuracy of reported lodging taxes.
- **Assessment of Unpaid Taxes.** Allows the City Auditor to determine and assess unpaid taxes based on available information when a lodging operator fails to file reports, provides inaccurate information, or fails to cooperate with an audit.
- **Collection of Delinquent Taxes.** Expressly authorizes the City to pursue civil collection of unpaid taxes, penalties, and interest.
- **Penalties for Noncompliance.** Establishes an infraction, punishable by a fine of up to $1,000 per offense, for failing to comply with reporting, payment, and recordkeeping requirements.
- **Personal Liability.** Establishes personal liability for corporate officers, managers, and other individuals responsible for filing lodging tax returns or making required tax payments.

Many of these proposed provisions are similar to the enforcement tools already available to the North Dakota State Tax Commissioner under state law, including the authority to audit records, assess unpaid

taxes, pursue collection, and hold certain individuals personally liable for unpaid taxes. The amendments do not change the existing lodging tax rates or the purposes for which the revenues may be used. Rather, they are intended to provide the City with tools to ensure that lodging taxes are properly reported, collected, and remitted.

RECOMMENDED MOTION: I move to receive and file the enclosed ordinance amending Articles 3-13 and 3-14 of Chapter 3 of the Fargo Municipal Code relating to the administration, collection, and enforcement of City lodging taxes, and to place the ordinance on the agenda of the next regularly scheduled City Commission meeting for first reading.

Sincerely,

Ian R. McLean
City Attorney

Encl.

OFFICE OF THE CITY ATTORNEY
FARGO, NORTH DAKOTA

ORDINANCE NO. _____

AN ORDINANCE AMENDING SECTION 3-1303 AND ENACTING SECTIONS 3-1308, 3-1309, 3-1310, 3-1311, AND 3-1312 OF ARTICLE 3-13 AND AMENDING SECTION 3-1403 AND ENACTING SECTIONS 3-1409, 3-1410, 3-1411, 3-1412, AND 3-1413 OF ARTICLE 3-14 OF CHAPTER 3 OF THE FARGO MUNICIPAL CODE RELATING TO ADMINISTRATION, COLLECTION, AND ENFORCEMENT OF CITY LODGING TAXES

WHEREAS, the electorate of the city of Fargo has adopted a home rule charter in accordance with Chapter 40-05.1 of the North Dakota Century Code; and

WHEREAS, Section 40-05.1-06 of the North Dakota Century Code provides that the City shall have the right to implement home rule powers by ordinance; and

WHEREAS, Section 40-05.1-05 of the North Dakota Century Code provides that said home rule charter and any ordinances made pursuant thereto shall supersede state laws in conflict therewith and shall be liberally construed for such purpose; and

WHEREAS, Sections 40-57.3-01 and 40-57.3-01.1 of the North Dakota Century Code authorize the imposition of certain municipal lodging taxes, and the City of Fargo has enacted Article 3-13 of Chapter 3 of the Fargo Municipal Code imposing a three percent (3%) lodging tax for visitors' promotion and capital construction purposes; and

WHEREAS, on November 5, 2024, the electorate of the City of Fargo approved an amendment to the City's home rule charter authorizing an additional three percent (3%) lodging tax for the purpose of financing the construction, maintenance, and operation of a convention center, and the City thereafter enacted Article 3-14 of Chapter 3 of the Fargo Municipal Code implementing such authority; and

WHEREAS, the lodging taxes imposed pursuant to Articles 3-13 and 3-14 are administered and collected by the City of Fargo, and the Board of City Commissioners desires to establish consistent and effective procedures for the reporting, payment, administration, and enforcement of such taxes; and

WHEREAS, the Board of City Commissioners finds it necessary and appropriate to strengthen the City's ability to verify the accuracy of lodging tax returns, examine relevant records, determine and collect unpaid taxes, and impose appropriate penalties and other remedies for noncompliance; and

OFFICE OF THE CITY ATTORNEY
FARGO, NORTH DAKOTA

ORDINANCE NO. _____

WHEREAS, the Board of City Commissioners deems it necessary and appropriate to amend Articles 3-13 and 3-14 to provide additional and substantially uniform enforcement mechanisms to promote compliance with the City's lodging tax requirements and ensure the proper collection of revenues for their authorized purposes;

NOW, THEREFORE, Be it Ordained by the Board of City Commissioners of the City of Fargo:

Section 1. Amendment. Sections 3-1303 of Article 3-13 of Chapter 3 of the Fargo Municipal Code, is hereby amended as follows:

3-1303. Collection of Tax. The tax hereby imposed shall be computed by every retailer and paid to the city of Fargo. Such computation shall be on a monthly basis and payment for each month shall be made to the city on or before the 10th day of the following month. The payment shall be accompanied by a report indicating the amount of gross receipts for the reporting period and shall be certified by a certified public accountant or by the retailer, or managing officer thereof. The city may retain up to 3% of the total amount collected for administrative costs. The city auditor may prescribe the form of such reports and require such additional information as may be reasonably necessary to determine the correctness of the report and the amount of tax due.

Section 2. Enactment. Sections 3-1308, 3-1309, 3-1310, 3-1311, and 3-1312 of Article 3-13 of Chapter 3 of the Fargo Municipal Code, are hereby enacted as follows:

3-1308. Records required; Examination and audit.

(1) Every retailer required to file a report or pay any tax pursuant to this article shall maintain and preserve complete and accurate books, records, and other information sufficient to determine the amount of taxable gross receipts and to verify the correctness of all reports filed and taxes paid. Such records shall include, but are not limited to, room rental and occupancy records, reservation records, invoices, receipts, financial statements, accounting records, records of exemptions and refunds, and any other records reasonably related to determining the amount of tax due.
(2) The city auditor, or the city auditor's authorized representative, shall have the authority to examine, inspect, and audit the books, records, accounts, and other information of any retailer as may be necessary to determine compliance with this article. Upon reasonable notice, every retailer shall make such records available for inspection during normal business hours or shall provide copies thereof, including electronically maintained records, in the manner reasonably requested by the city auditor.
(3) The city auditor may require a retailer to provide additional information, explanations, supporting documentation, or reconciliations reasonably necessary to determine the

OFFICE OF THE CITY ATTORNEY
FARGO, NORTH DAKOTA

ORDINANCE NO. _____

correctness of any report or the amount of tax due.

3-1309. Determination and assessment of unpaid taxes.

(1) If any retailer fails to file a report required under this article, files an incomplete or inaccurate report, fails to pay the full amount of tax due, or fails to maintain or produce records sufficient to determine the amount of tax due, the city auditor may determine and assess the tax due based upon the best information reasonably available to the city.
(2) In making such determination, the city auditor may consider prior tax returns, occupancy records, room rates, financial statements, comparable reporting periods, information obtained through an audit, and any other reasonably reliable information. The determination shall not be invalid solely because it is based upon estimated or indirect evidence rather than the retailer's actual books and records.
(3) The city auditor shall provide written notice of the assessment, including the amount of tax, penalties, and interest determined to be due. The assessment shall be presumed correct, and the retailer shall bear the burden of establishing that the assessment is incorrect. If the amount assessed is not paid within thirty (30) days after notice, the city may pursue collection pursuant to section 3-1310 without any requirement for further administrative proceedings. The retailer may contest the assessment in any civil action brought by the city to recover the amount due.

3-1310. Collection of delinquent taxes; Civil remedies.

(1) Any tax imposed under this article, together with any applicable penalties and interest, shall constitute a debt owed by the retailer to the city of Fargo, whether or not such tax has been collected from the person paying for the lodging accommodations.
(2) If any retailer fails to pay any tax, penalty, or interest due under this article, the city may institute a civil action in any court of competent jurisdiction to recover the amount due, together with any costs of collection and attorney's fees recoverable under applicable law.
(3) The city auditor may enter into written payment arrangements for delinquent taxes, penalties, and interest in accordance with policies approved by the board of city commissioners. The acceptance of partial payment or the establishment of a payment arrangement shall not constitute a waiver of the remaining amount due unless expressly authorized by the board of city commissioners.
(4) The remedies provided under this article shall be cumulative and shall not preclude the city from pursuing any other remedy available under applicable law.

OFFICE OF THE CITY ATTORNEY
FARGO, NORTH DAKOTA

ORDINANCE NO. _____

3-1311. Willful violations, Penalties.

(1) It shall be unlawful for any retailer required to comply with this article to:

(a) Fail to file a report required under this article within the time prescribed;
(b) Fail to pay or remit any tax required under this article within the time prescribed;
(c) Fail to maintain or preserve records under section 3-1308; or
(d) Failure to produce records or information required under section 3-1308 within fifteen (15) days after receiving a written demand from the city auditor.

(2) A violation of subsection 1 shall constitute a strict liability offense. Proof that the retailer acted knowingly, intentionally, willfully, recklessly, or negligently shall not be required to establish a violation. The city shall be required to establish only that the retailer was subject to the applicable requirement and failed to comply therewith.

(3) It shall further be unlawful for any person to knowingly submit a materially false or fraudulent report required under this article, knowingly falsify or conceal records for the purpose of evading the tax imposed by this article, or intentionally interfere with an examination or audit conducted pursuant to this article.

(4) Any person who violates this section is guilty of an infraction for each offense. Each reporting period for which a separate report or payment is required and not timely submitted or made constitutes a separate offense.

(5) The imposition of a criminal penalty under this section shall not relieve the retailer of the obligation to pay any tax, civil penalty, or interest due under this article and shall not preclude the city from pursuing any civil or administrative remedy otherwise available.

3-1312. Personal liability for unpaid taxes.

(1) If a retailer is a corporation, limited liability company, partnership, or other business entity that fails to file a required return or pay any tax due under this article, any officer, governor, manager, managing member, general partner, or other individual having control or supervision of, or charged with responsibility for, preparing and filing the required returns or making the required tax payments shall be personally liable, jointly and severally with the retailer, for the unpaid taxes, penalties, and interest arising from such failure.

(2) Liability under this section shall not require proof that the responsible person acted knowingly, intentionally, willfully, or with intent to evade the tax imposed by this article. Such liability may arise regardless of whether the retailer actually collected the tax from persons paying for lodging accommodations.

(3) The dissolution, termination, sale, transfer, or reorganization of a business entity shall

OFFICE OF THE CITY ATTORNEY
FARGO, NORTH DAKOTA

ORDINANCE NO. _____

not discharge the liability of any responsible person arising before such event.

(4) The city may assess and collect amounts due from a responsible person under this section in the same manner as other taxes, penalties, and interest imposed under this article. The liability of a responsible person shall be in addition to the liability of the retailer, provided that the city shall not recover the same underlying obligation more than once.

Section 3. Amendment. Section 3-1403 of Article 3-14 of Chapter 3 of the Fargo Municipal Code is hereby amended as follows:

3-1403. Collection of Tax.

The tax hereby imposed shall be computed by every retailer and paid to the city of Fargo. Such computation shall be on a monthly basis and payment for each month shall be made to the city on or before the 10th day of the following month. The payment shall be accompanied by a report indicating the amount of gross receipts for the reporting period and shall be certified by a certified public accountant or by the retailer, or managing officer thereof. The city may retain up to 3% of the total amount collected for administrative costs. The city auditor may prescribe the form of such reports and require such additional information as may be reasonably necessary to determine the correctness of the report and the amount of tax due.

Section 4. Enactment. Sections 3-1409, 3-1410, and 3-1411, 3-1412, and 3-1413 of Article 3-13 of Chapter 3 of the Fargo Municipal Code, are hereby enacted as follows:

3-1409. Records required; Examination and audit.

(1) Every retailer required to file a report or pay any tax pursuant to this article shall maintain and preserve complete and accurate books, records, and other information sufficient to determine the amount of taxable gross receipts and to verify the correctness of all reports filed and taxes paid. Such records shall include, but are not limited to, room rental and occupancy records, reservation records, invoices, receipts, financial statements, accounting records, records of exemptions and refunds, and any other records reasonably related to determining the amount of tax due.

(2) The city auditor, or the city auditor's authorized representative, shall have the authority to examine, inspect, and audit the books, records, accounts, and other information of any retailer as may be necessary to determine compliance with this article. Upon reasonable notice, every retailer shall make such records available for inspection during normal business hours or shall provide copies thereof, including electronically maintained records, in the manner reasonably requested by the city auditor.

(3) The city auditor may require a retailer to provide additional information, explanations,

OFFICE OF THE CITY ATTORNEY
FARGO, NORTH DAKOTA

ORDINANCE NO. _____

supporting documentation, or reconciliations reasonably necessary to determine the correctness of any report or the amount of tax due.

3-1410. Determination and assessment of unpaid taxes.

(1) If any retailer fails to file a report required under this article, files an incomplete or inaccurate report, fails to pay the full amount of tax due, or fails to maintain or produce records sufficient to determine the amount of tax due, the city auditor may determine and assess the tax due based upon the best information reasonably available to the city.
(2) In making such determination, the city auditor may consider prior tax returns, occupancy records, room rates, financial statements, comparable reporting periods, information obtained through an audit, and any other reasonably reliable information. The determination shall not be invalid solely because it is based upon estimated or indirect evidence rather than the retailer's actual books and records.
(3) The city auditor shall provide written notice of the assessment, including the amount of tax, penalties, and interest determined to be due. The assessment shall be presumed correct, and the retailer shall bear the burden of establishing that the assessment is incorrect. If the amount assessed is not paid within thirty (30) days after notice, the city may pursue collection pursuant to section 3-1411 without any requirement for further administrative proceedings. The retailer may contest the assessment in any civil action brought by the city to recover the amount due.

3-1411. Collection of delinquent taxes; Civil remedies.

(1) Any tax imposed under this article, together with any applicable penalties and interest, shall constitute a debt owed by the Retailer to the city of Fargo, whether or not such tax has been collected from the person paying for the lodging accommodations.
(2) If any Retailer fails to pay any tax, penalty, or interest due under this article, the city may institute a civil action in any court of competent jurisdiction to recover the amount due, together with any costs of collection and attorney's fees recoverable under applicable law.
(3) The city auditor may enter into written payment arrangements for delinquent taxes, penalties, and interest in accordance with policies approved by the board of city commissioners. The acceptance of partial payment or the establishment of a payment arrangement shall not constitute a waiver of the remaining amount due unless expressly authorized by the board of city commissioners.
(4) The remedies provided under this article shall be cumulative and shall not preclude the city from pursuing any other remedy available under applicable law.

OFFICE OF THE CITY ATTORNEY
FARGO, NORTH DAKOTA

ORDINANCE NO. _____

3-1412. Willful violations; penalties.

(1) It shall be unlawful for any retailer required to comply with this article to:

(e) Fail to file a report required under this article within the time prescribed;
(f) Fail to pay or remit any tax required under this article within the time prescribed;
(g) Fail to maintain or preserve records under section 3-1308; or
(h) Failure to produce records or information required under section 3-1308 within fifteen (15) days after receiving a written demand from the city auditor.

(2) A violation of subsection 1 shall constitute a strict liability offense. Proof that the retailer acted knowingly, intentionally, willfully, recklessly, or negligently shall not be required to establish a violation. The city shall be required to establish only that the retailer was subject to the applicable requirement and failed to comply therewith.

(3) It shall further be unlawful for any person to knowingly submit a materially false or fraudulent report required under this article, knowingly falsify or conceal records for the purpose of evading the tax imposed by this article, or intentionally interfere with an examination or audit conducted pursuant to this article.

(4) Any person who violates this section is guilty of an infraction for each offense. Each reporting period for which a separate report or payment is required and not timely submitted or made constitutes a separate offense.

(5) The imposition of a criminal penalty under this section shall not relieve the retailer of the obligation to pay any tax, civil penalty, or interest due under this article and shall not preclude the city from pursuing any civil or administrative remedy otherwise available.

3-1413. Personal liability for unpaid taxes.

(1) If a retailer is a corporation, limited liability company, partnership, or other business entity that fails to file a required return or pay any tax due under this article, any officer, governor, manager, managing member, general partner, or other individual having control or supervision of, or charged with responsibility for, preparing and filing the required returns or making the required tax payments shall be personally liable, jointly and severally with the retailer, for the unpaid taxes, penalties, and interest arising from such failure.

(2) Liability under this section shall not require proof that the responsible person acted knowingly, intentionally, willfully, or with intent to evade the tax imposed by this article. Such liability may arise regardless of whether the retailer actually collected the tax from persons paying for lodging accommodations.

(3) The dissolution, termination, sale, transfer, or reorganization of a business entity shall

OFFICE OF THE CITY ATTORNEY
FARGO, NORTH DAKOTA

ORDINANCE NO. _____

not discharge the liability of any responsible person arising before such event.

(4) The city may assess and collect amounts due from a responsible person under this section in the same manner as other taxes, penalties, and interest imposed under this article. The liability of a responsible person shall be in addition to the liability of the retailer, provided that the city shall not recover the same underlying obligation more than once.

Section 5. Effective Date.

This ordinance shall be in full force and effect from and after its passage and approval.

_____
Joshua A. Boschee, Mayor

(SEAL)

Attest:

_____
Angie Bear, Deputy City Auditor on behalf of the City Auditor

First Reading:
Second Reading:
Final Passage:

3

THE CITY OF Fargo FAR MORE

OFFICE OF THE CITY ATTORNEY

CITY ATTORNEY
Ian R. McLean

SERKLAND LAW FIRM
10 Roberts Street North
Fargo, ND 58102
Phone: 701.232.8957 | Fax: 701.237.4049

ASSISTANT CITY ATTORNEYS
Alissa R. Farol Czapiewski • William B. Wischer
• Kasey D. McNary • Elijah P. Hartsell

November 19, 2026

Board of City Commissioners
City Hall
225 4th Street North
Fargo, ND 58102

RE: Proposed Amendments to Lodging Establishment Regulations and Penalties

Dear Mayor and Commissioners,

At the direction of the Board of City Commissioners ("Board") at its July 20, 2026 regular meeting, the City Attorney's Office, in coordination with the Environmental Health Division of Fargo Cass Public Health ("FCPH"), has reviewed and revised Article 13-14 of the Fargo Municipal Code, relating to lodging establishments. Enclosed for the Board's consideration are proposed amendments to Article 13-14 and Section 1-0305(A)(1), relating to the classification of ordinance violations.

The proposed revisions substantially reorganize and update Article 13-14. Many of the existing provisions have been eliminated because their requirements are already addressed in Chapter 33-39-01 of the North Dakota Administrative Code, which establishes sanitation standards for lodging establishments. Rather than duplicating those requirements, the revised ordinance adopts the applicable state regulations by reference. This approach reduces duplication while preserving the City's authority to regulate lodging establishments and enforce applicable requirements.

The proposed revisions include the following key changes:

1. **Licensing**. Clarifies requirements for obtaining and renewing lodging establishment licenses, including changes in ownership, conditions of licensure, and the withholding or denial of license renewal.

2. **Corrective Measures**. Expressly authorizes FCPH to require corrective action plans, professional assessments, remediation, testing, and verification of completed work to address health or safety concerns.

3. **Enforcement**. Clarifies FCPH's authority to suspend or revoke licenses, order the closure of establishments, and restrict the use or occupancy of affected areas when necessary to protect public health or safety.

4. **Notice and Hearings**. Establishes procedures for providing notice of enforcement actions and an opportunity for affected owners, operators, or licensees to request a hearing before the Board.

The proposed amendment to Section 1-0305(A)(1) would also increase the penalty for violations of Article 13-14 from an infraction to a Class B misdemeanor. This classification is consistent with N.D.C.C. § 23-09-21, which establishes a Class B misdemeanor for operating a lodging establishment without complying with the requirements of N.D.C.C. Chapter 23-09. The proposed amendment would provide the City with an additional enforcement option for addressing serious or repeated violations and promoting compliance with applicable health and safety requirements.

Please feel free to contact Grant or me if you have any questions or concerns.

Suggested Motion: I move to receive and file the enclosed ordinances amending Article 13-14 of Chapter 13 of the Fargo Municipal Code, relating to lodging establishments, and Section 1-0305(A)(1) of Article 1-03 of Chapter 1, relating to the classification of ordinance violations, and to place both ordinances on the agenda for first reading at the next regularly scheduled City Commission meeting.

Sincerely,

Alissa R. Farol Czapiewski
Assistant City Attorney

Enclosures

cc: Grant Larson, Environmental Health Director

OFFICE OF THE CITY ATTORNEY
FARGO, NORTH DAKOTA

ORDINANCE NO. _____

AN ORDINANCE AMENDING ARTICLE 13-14 OF CHAPTER 13 OF THE FARGO MUNICIPAL CODE RELATING TO LODGING ESTABLISHMENTS

WHEREAS, the electorate of the City of Fargo has adopted a home rule charter in accordance with Chapter 40-05.1 of the North Dakota Century Code; and

WHEREAS, Section 40-05.1-06 of the North Dakota Century Code provides that the City shall have the right to implement home rule powers by ordinance; and

WHEREAS, Section 40-05.1-05 of the North Dakota Century Code provides that said home rule charter and any ordinances made pursuant thereto shall supersede state laws in conflict therewith and shall be liberally construed for such purpose; and

WHEREAS, the Board of City Commissioners deems it necessary and appropriate to implement such authority by the adoption of this ordinance;

NOW, THEREFORE,

Be it Ordained by the Board of City Commissioners of the City of Fargo:

Section 1. Amendment.

Article 13-14 of Chapter 13 of the Fargo Municipal Code is hereby amended to read as follows:

ARTICLE 13-14 – LODGING ESTABLISHMENTS

13-1401. Definitions.

~~1. "Clean" - Shall mean the absence of dirt, grease, rubbish, garbage, and other offensive, unsightly or extraneous matter.~~

~~2. "Employee" - Shall mean any person working in a lodging establishment including janitors, maids, porters, and other persons whose duties include the cleaning of rooms, toilets, or other parts of the building.~~

OFFICE OF THE CITY ATTORNEY
FARGO, NORTH DAKOTA

ORDINANCE NO. _____

~~3. "Good repair" - Shall mean free of corrosion, breaks, cracks, chips, pitting, excessive wear and tear, leaks, obstructions, and similar defects so as to constitute a good and sound condition.~~

~~4. "Guest" - Shall mean an occupant of any lodging establishment.~~

~~5. "Guest room" - Shall mean any room used by a guest for sleeping purposes.~~

~~6~~1."Health Department" -~~Shall~~ means Fargo Cass Public Health.

~~7. "Health hazard" - Shall mean any chemical agent, source of filth, cause of sickness, or condition that is a health threat to employees or guests.~~

~~8~~2. "Lodging Establishment" -~~Shall~~ means ~~a building, structure, enclosure, or any part thereof used as, maintained as, advertised as, or held out to be a place where sleeping accommodations are furnished to the public for a charge and for periods of less than one week. The term does not include residential or personal dwelling units.~~ any establishment meeting the definition set forth in North Dakota Administrative Code Section 33-39-01-01.

~~9. "Public restroom" - Shall mean any facility that provides toilet and handwashing facilities for the general public.~~

3. "Licensee" - means the person or entity to whom a lodging establishment license has been issued pursuant to this article.

4. "Operator" - means the person or entity responsible for the day-to-day operation or management of a lodging establishment.

13-1402. ~~Application.~~ Applicability; Adoption of Regulations; Authority of Health Department.

~~All lodging establishments shall be subject to the requirements of this article and the rules or regulations promulgated hereunder.~~

A. **Applicability**. All lodging establishments within the city of Fargo shall comply with the provisions of this article and the regulations adopted herein.

OFFICE OF THE CITY ATTORNEY
FARGO, NORTH DAKOTA

ORDINANCE NO. _____

B. **Adoption of State Regulations**. The city of Fargo adopts Chapter 33-39-01 of the North Dakota Administrative Code, entitled "Lodging Establishment Sanitation Standards," as part of this article. Chapter 33-39-02 of the North Dakota Administrative Code, relating to license fees, is expressly excluded from this adoption.

C. **Authority of Health Department**. The Health Department and its authorized representatives shall administer and enforce this article and the regulations adopted herein. The Health Department may adopt additional rules, regulations, and standards governing lodging establishments, subject to approval by the Board of City Commissioners.

~~**13-1403. Rules and Regulations.**~~

~~**13-1403.1 Regulation by Health Department.**~~

~~The health department, and agents and employees thereof, shall have authority to regulate the public health and safety in the city of Fargo concerning use, design, operation, and maintenance of lodging establishments and shall have such authority to adopt regulations, rules, standards and practices. Such regulations, rules, standards, and practices shall be approved by the board of city commissioners, and are hereby adopted by reference and fully incorporated herein, including any amendments hereinafter adopted, and shall be controlling within the jurisdiction of the city of Fargo.~~

~~The Health Department and its authorized representatives shall have authority to administer and enforce the provisions of this article and the regulations adopted herein.~~

~~**13-1403.2 Health Department Approval of Construction Plans.**~~

~~Before work is commenced on the construction of a lodging establishment, or there is any alteration, addition, remodeling, or other improvement, the plans and specifications must be approved by the health department.~~

OFFICE OF THE CITY ATTORNEY
FARGO, NORTH DAKOTA

ORDINANCE NO. _____

13-1403.~~3~~ Inspection by Health Department.

The ~~h~~Health ~~d~~Department may inspect or cause to be inspected all lodging establishments within the city of Fargo, ~~at such times~~as authorized by law, to determine compliance with this article and the regulations adopted herein. Inspections may include photographing conditions, examining relevant records, and collecting samples or other evidence as reasonably necessary to enforce this article, subject to applicable law. ~~as it may deem necessary to carry out the intent of this ordinance. In the event of the failure of compliance after due notice with the rules and regulations and requirements of this ordinance, the health department shall have the power to abate or cause a suspension of use of such lodging establishment until such time the health department deems there to be no longer a menace or a hazard to health, safety or morals. Yearly inspection fees shall be established by resolution of the board of city commissioners.~~

A written inspection report shall be prepared, and a copy shall be provided to the owner, operator, or licensee. No person shall obstruct, interfere with, or refuse a lawful inspection conducted pursuant to this article. When entry or inspection is refused, the Health Department may seek an administrative search warrant as authorized by law.

The Health Department may require corrective action, suspend or revoke a license, or order closure of a lodging establishment or any portion thereof, as provided in this article.

13-1404. ~~Exterior maintenance and parking.~~ Operation of Lodging Establishments – License Required.

~~13-1404.1 Every building, structure, or enclosure used to provide lodging accommodations for the public shall be kept in good repair, and so maintained as to promote the health, comfort, safety, and well-being of persons accommodated.~~

OFFICE OF THE CITY ATTORNEY
FARGO, NORTH DAKOTA

ORDINANCE NO. _____

~~13-1404.2 - There shall be at least one parking spot provided for each lodging room in a lodging establishment and for all staff. The parking lot and all property used in connection with the lodging establishment shall be kept free of litter and refuse. Also, the walking and driving surfaces of all exterior areas shall be surfaced with concrete or asphalt or a similar material effectively treated to facilitate maintenance and minimize dust. These surfaces shall be graded to prevent pooling. Only articles necessary for the operation and maintenance of the lodging establishment shall be stored on the premises.~~

~~13-1404.3 - Outside openings shall be protected against the entrance of insects and rodents by tight fitting, self-closing doors, closed windows, and screening or other approved means. Screen doors shall be self-closing, and screens for windows, doors, skylights, intake and exhaust air ducts and other openings to the outside shall be tight fitting and free of breaks or holes. Screening materials shall not be less than sixteen mesh to the inch.~~

No person shall operate a lodging establishment without first applying for and obtaining a license issued by the Health Department. The Health Department shall issue a license after a pre-operational inspection confirms that the establishment and its operations meet the requirements of this article. Each lodging establishment must have its own license. A license cannot be transferred to another owner.

The initial license shall extend from the date of issuance until the end of the calendar year. Each license shall expire on December 31 of the year for which it is issued. The applicable annual license fee shall be submitted before January 1 of each subsequent year. The annual license fee shall be established by resolution of the Board of City Commissioners.

A license shall be deemed renewed upon timely payment of the applicable annual license fee, unless the Health Department has previously provided written notice to the licensee that renewal may be withheld due to outstanding violations or other grounds authorized under this article, and those grounds remain unresolved at the time of renewal. The Health Department shall provide written notice of any decision to withhold or deny renewal, including the grounds for the action and the right to request a hearing under Section 13-1407(G). The Health Department may impose conditions upon renewal as provided in subsection C.

OFFICE OF THE CITY ATTORNEY
FARGO, NORTH DAKOTA

ORDINANCE NO. _____

No lodging establishment shall operate without a valid license or while its license is suspended or revoked.

Each licensee shall provide the Health Department with a current mailing address, electronic mail address, and contact information for the owner, operator, or other designated representative responsible for receiving notices under this article. The licensee shall notify the Health Department in writing of any changes to such information within ten (10) days.

A. **Change of Ownership**. A change in ownership of a lodging establishment shall require the new owner to apply for and obtain a new license. The owner or operator shall notify the Health Department in writing of a proposed change in ownership prior to the transfer, and the new owner shall obtain a license before commencing operations. If a change in ownership occurs without prior notice, the new owner shall notify the Health Department in writing immediately upon acquiring ownership.

B. **Outstanding Violations**. When a lodging establishment has outstanding violations at the time of a change in ownership, the Health Department may require the new owner or operator to submit a written corrective action plan identifying the violations, proposed corrective measures, and a timeframe for completion.

The Health Department may issue a license subject to compliance with an approved corrective action plan if it determines that the outstanding violations can be corrected while the establishment continues operating without creating a substantial risk to public health or safety. The Health Department may also restrict the use or occupancy of affected areas as a condition of the license.

C. **Conditions of Licensure**. The Health Department may impose reasonable conditions when issuing or renewing a license to ensure compliance with this article. Conditions may include deadlines for corrective work, documentation showing that work is complete, or restrictions on use or occupancy of affected areas.

OFFICE OF THE CITY ATTORNEY
FARGO, NORTH DAKOTA

ORDINANCE NO. _____

Failure to follow license conditions or an approved corrective action plan may result in suspension or revocation of the license.

D. **Denial of License**. The Health Department may deny an application for an initial license or withhold renewal of an existing license when the applicant, owner, operator, licensee, or lodging establishment fails to satisfy the requirements of this article, including applicable sanitation standards, or when the proposed operation would present a substantial risk to public health or safety. When an application for an initial license is denied, or renewal is withheld pending correction of outstanding violations, the Health Department shall provide written notice identifying the specific grounds for the action, any corrective measures required, and the right to request a hearing under Section 13-1407(G). Except as otherwise provided by this section regarding automatic renewal, payment of the applicable license fee shall not, by itself, constitute issuance or renewal of a license. An initial license shall not be issued, and an expired license shall not be deemed renewed, solely because a hearing has been requested.

~~**13-1405. Restrooms and handwashing facilities.**~~

~~13-1405.1 - All public restrooms shall be provided with mechanical ventilation, self-closing doors, and proper handwashing facilities. The handwashing sink shall be equipped with self-dispensing soap and self-dispensing disposable towels or a hand drying device providing heated air and a suitable waste receptacle. Handwashing sinks shall also provide hot and cold water tempered by means of a mixing valve or combination faucet. Hot water shall not exceed one hundred twenty degrees (120°F). Any self-closing, slow-closing, or metering faucet shall be designed to provide a flow of water for at least fifteen seconds without the need to reactivate the faucet.~~

~~13-1405.2 - Restroom facilities shall be conveniently located and shall be accessible to employees and guests at all times.~~

~~13-1405.3 - Handwashing facilities, soap dispensers, hand drying devices and all related fixtures shall be kept clean and in good repair.~~

OFFICE OF THE CITY ATTORNEY
FARGO, NORTH DAKOTA

ORDINANCE NO. _____

~~13-1405.4 Walls, floors, and ceilings in restrooms shall be constructed of smooth, easily cleanable materials and shall be kept clean and in good repair.~~

~~13-1406 Guest rooms.~~

~~13-1406.1 Walls, floors, and ceilings in guest rooms shall be constructed of smooth easily cleanable materials and shall be kept clean and in good repair. This includes furniture, drapes, curtains, lamp shades, carpeting and all other fixtures.~~

~~13-1406.2 All beds, bunks, cots, and other sleeping places provided for guests in lodging establishments shall be supplied with suitable pillow slips and top sheets. All bedding including mattresses, quilts, blankets, pillows, sheets, spreads and all bath linen shall be kept clean. No bedding, including mattresses, quilts, blankets, pillows, bed and bath linen shall be used which are worn out or unfit for further use. Pillow slips, sheets, and bath linen after being used by one guest shall be washed before they are used by another guest, so a clean set is furnished after each succeeding guest. For any guest occupying a guest room for an extended period of time, a fresh set of sheets and pillow slips shall be furnished at least once each week, and at least two clean towels per guest each day if they are requested.~~

~~13-1406.3 Each lodging establishment must provide toilet, handwashing, and bathing facilities for its guests. There must be a ratio of 1 toilet and bathing facility for every 8 guests. These facilities must be maintained in good repair and cleaned at least between stays of different guests. All toilet and bathing facilities must also be well ventilated. An area is well ventilated when excessive heat, odors, fumes, vapors, smoke, or condensation is reduced to a negligible level and barely perceptible to the normal senses.~~

~~13-1406.4 All guest rooms must have a heating system able to maintain a minimum temperature of 67°F.~~

~~13-1406.5 The doors of all guest rooms used for sleeping in any lodging establishment shall be equipped with proper bolts or locks to permit the occupants to lock or bolt such doors securely from within the rooms. Such bolts or locks shall be constructed in a manner which will render it impossible to unbolt or unlock the door from the outside.~~

OFFICE OF THE CITY ATTORNEY
FARGO, NORTH DAKOTA

ORDINANCE NO. _____

~~**13-1407. Interior construction.**~~

~~13-1407.1 Walls, floors, and ceilings in hallways, lobbies, and laundry rooms shall be constructed of smooth easily cleanable materials and shall be kept clean and in good repair.~~

~~13-1407.2 All laundry rooms and any other rooms used to store linen, cribs, roll away beds, food, or food service equipment must shield all lights or use shatterproof bulbs.~~

~~**13-1408. Water supply.**~~

~~13-1408.1 – A safe adequate supply of potable water with both hot and cold under pressure shall be provided in all bathrooms and toilets.~~

~~13-1408.2 – Guest room glasses must be single service or multi use glasses that are cleaned and sanitized between each different guest.~~

~~13-1408.3 – Self-service ice provided for guests must be dispensed through the use of self-dispensing ice machines or prepackaged from an approved source. Self-service ice storage bins are not acceptable for guest use and must be kept in areas not accessible to guests. All self-dispensing ice machines shall be cleaned and sanitized internally every quarter (3 months).~~

~~**13-1409. Plumbing.**~~

~~All plumbing shall be properly maintained and meet all state and local plumbing codes.~~

~~**13-1410. Garbage/Refuse disposal.**~~

~~13-1410.1 – All liquid wastes shall be disposed of in an approved public sewage system.~~

OFFICE OF THE CITY ATTORNEY
FARGO, NORTH DAKOTA

ORDINANCE NO. _____

~~13-1410.2 Prior to removal, all garbage and refuse stored within the premises shall be kept in watertight, nonabsorbent receptacles which are covered with close fitting lids to prevent access to birds, rodents, and other vermin. These garbage receptacles shall be kept in good repair.~~

~~13-1410.3 All garbage, trash, and refuse shall be removed from the premises frequently to prevent nuisance and unsightly conditions and shall be disposed of in a sanitary manner.~~

~~13-1411. Miscellaneous.~~

~~13-1411.1 All cleaning operations must be conducted in a manner that minimizes contamination of the facility. Cleaning equipment, supplies, insecticides, paints, and other toxic materials must be stored properly. They may not be stored above or next to linens, food, or food service equipment. All cleaners, sanitizers, and disinfectants must comply with 21 CFR section 178.1010. An ingredient label and "direction for use" label on each chemical being used must be readily available for reference or inspection. All containers used for dispensing these chemicals must be prominently and distinctively labeled for identification of contents.~~

~~13-1411.2 Every lodging establishment shall be constructed, maintained, and equipped to prevent the entrance, harborage, or breeding of flies, roaches, bedbugs, rats, mice, and all other insects and vermin. They must also have means necessary to eliminate such pests such as cleaning, renovation, or fumigation. The health department may order the facility to hire a licensed exterminator to exterminate pests when:~~

~~A. The infestation is so extensive that it is unlikely that a nonprofessional can eradicate the pests effectively.~~
~~B. The extermination method of choice can only be carried out by a licensed exterminator.~~
~~C. Upon reinspection it is found that the establishment has not been brought into compliance with a prior order to rid the establishment of pests.~~

OFFICE OF THE CITY ATTORNEY
FARGO, NORTH DAKOTA

ORDINANCE NO. _____

13-1405. Corrective and Remedial Measures.

When the Health Department identifies a violation of this article or a condition that threatens public health or safety, it may require the owner or operator to take reasonable steps to correct the violation or condition.

These steps may include professional inspections, environmental assessments, testing, pest control, cleaning, repairs, replacement, remediation, or verification that the work is complete. The Health Department may require a qualified professional to perform the work when reasonably necessary based on the nature or extent of the problem.

The owner or operator shall be responsible for the costs associated with the required corrective or remedial measures.

A. **Restriction of Use or Occupancy**. When the Health Department determines that a guest room, facility, equipment, amenity, or other portion of a lodging establishment presents a threat to public health or safety, the Health Department may prohibit its use or occupancy in accordance with the procedures established in Section 13-1407.

   The Health Department may require reinspection, documentation, or professional verification of corrective measures before authorizing the resumption of use or occupancy.

B. **Use of Equipment and Facilities**. All equipment and facilities within a lodging establishment shall be used in accordance with their intended purposes and maintained and operated in a manner that does not create a health or safety hazard.

OFFICE OF THE CITY ATTORNEY
FARGO, NORTH DAKOTA

ORDINANCE NO. _____

13-1406. Notices and Enforcement.

A. **Notice of Violation.** When the Health Department finds that a lodging establishment violates this article or the regulations adopted under it, the Department may issue a written notice to the owner, operator, or licensee. If the Department requires corrective action, the notice must identify the violations, the steps required to correct them, and the deadline for compliance, except when immediate action is authorized under Section 13-1407.

The Health Department may require compliance deadlines based upon the nature and severity of the violations and the potential risk to public health or safety.

B. **Corrective Action Plans.** The Health Department may require the owner, operator, or licensee to submit a written corrective action plan explaining how the violations will be corrected and when the work will be completed.

The Health Department may approve a corrective action plan, reject it, or require changes. Failure to follow an approved plan may result in further enforcement action.

C. **Failure to Comply.** Failure to correct violations by the deadline, follow an approved corrective action plan, or comply with an order issued under this article may result in further enforcement action. This may include restrictions on use or occupancy, license suspension or revocation, or other remedies allowed by law.

D. **Service of Notices.** Notices of license denial, withholding of renewal, proposed license suspension or revocation, and closure or restriction orders shall be served personally, by registered or certified mail with return receipt requested, or by another method authorized by applicable law. Service upon a business entity may be made upon its registered agent or another person authorized by law to receive service on its behalf.

OFFICE OF THE CITY ATTORNEY
FARGO, NORTH DAKOTA

ORDINANCE NO. _____

The Health Department may provide additional copies of such notices by first-class mail, electronic mail, or other reasonable means to facilitate actual notice. If service cannot be completed by the methods specified above, the Health Department may pursue another method of service authorized by applicable law.

When immediate action is necessary to address an imminent threat to public health or safety, the Health Department may issue an immediate closure, suspension, or restriction order without prior service of notice. Written notice shall be served as soon as practicable thereafter.

A request for a hearing must be received by the Health Department no later than the last day of the ten (10)-day period, at the address or electronic submission location specified in the notice. The notice shall identify the methods by which a hearing request may be submitted. For purposes of calculating the ten (10)-day period to request a hearing under this article, service shall be deemed complete on the date of personal delivery, the date of delivery shown on the signed return receipt for registered or certified mail, the date of documented refusal of delivery when such refusal constitutes service under applicable law, or the date service is completed by another method authorized by law. The day of service shall not be included in calculating the ten-day period. Unclaimed registered or certified mail shall not constitute completed service. The ten-day period shall include intermediate Saturdays, Sundays, and legal holidays. If the final day falls on a Saturday, Sunday, or legal holiday, the deadline shall extend to the next business day.

The Health Department shall maintain documentation of the method and date of service, including any available return receipts, records of refused or unsuccessful delivery, or other proof of service.

OFFICE OF THE CITY ATTORNEY
FARGO, NORTH DAKOTA

ORDINANCE NO. _____

13-1407. License Suspension, Revocation, and Closure.

A. **Authority of the Health Department.** The Health Department may suspend or revoke a lodging establishment license, order the closure of a lodging establishment, or restrict the use or occupancy of any portion thereof, in accordance with the provisions of this article and applicable law.

B. **Immediate Closure and Restrictions on Use.**

1. When an imminent health hazard, as defined in North Dakota Administrative Code Section 33-39-01-01, exists within a lodging establishment, the establishment shall immediately discontinue operations of the affected portions and notify the North Dakota Department of Health and Human Services by phone or email within twenty-four (24) hours, in accordance with North Dakota Administrative Code Section 33-39-01-17.
2. When the Health Department determines that an imminent health hazard exists, it may immediately suspend the lodging establishment's license, order the closure of the establishment, or prohibit or restrict the use or occupancy of any affected guest room, facility, equipment, amenity, or other area. Any closure or restriction must be limited to what is reasonably necessary to address the hazard.

3. The Health Department shall provide written notice of the immediate action as soon as practicable. The notice shall identify the conditions necessitating the action, the portions of the establishment affected, the restrictions imposed, and the corrective measures required before operations or occupancy may resume. The notice shall also advise the owner, operator, or licensee of the right to request a hearing in accordance with subsection G.

4. An immediate suspension, closure, or restriction shall remain in effect until the Health Department determines that the conditions necessitating the action have been corrected and authorizes the resumption of operations or use, or until the order is otherwise modified or reversed in accordance with this article.

OFFICE OF THE CITY ATTORNEY
FARGO, NORTH DAKOTA

ORDINANCE NO. _____

5. The requirements of subsection E concerning occupied guest rooms, guest notification, relocation, and cooperation with City departments shall also apply to immediate closures and restrictions imposed under this subsection, to the extent practicable under the circumstances.

C. **Suspension of License.**

1. A lodging establishment license may be suspended for noncompliance with this article, failure to comply with an approved corrective action plan, or failure to comply with an order issued by the Health Department.

2. Except when immediate suspension is authorized under subsection B, the Health Department shall provide written notice of the proposed suspension and an opportunity to request a hearing before the suspension becomes effective.

3. The notice shall identify the grounds for suspension, the proposed effective date, the conditions for reinstatement, and the right to request a hearing before the Board of City Commissioners within ten (10) days after service of the notice.

4. When a suspension becomes effective, the lodging establishment shall cease operations and remain closed until the Health Department determines that the conditions resulting in suspension have been corrected and authorizes the resumption of operations.

5. Upon correction of the conditions resulting in suspension, the owner, operator, or licensee may request a reinspection. The Health Department may reinstate the existing license upon verification of compliance with this article and any applicable conditions of licensure.

OFFICE OF THE CITY ATTORNEY
FARGO, NORTH DAKOTA

ORDINANCE NO. _____

D. **Revocation of License.**

1. The Health Department may revoke a lodging establishment license for serious or repeated violations of this article, failure to comply with a suspension order, failure to comply with an approved corrective action plan, or unlawful obstruction of or interference with the Health Department's duties under this article.

2. Before revocation, the Health Department shall provide written notice of the proposed revocation, including the grounds for the proposed action, and an opportunity to request a hearing before the Board of City Commissioners within ten (10) days after service of the notice.

3. The effective date of a proposed revocation and the effect of a timely hearing request shall be governed by subsection G.

4. Revocation shall terminate the existing license. A lodging establishment whose license has been revoked shall cease operations and shall not resume operations unless a new license has been issued.

5. A new license may be issued only after:
   a. The owner or operator submits a new license application;
   b. The conditions resulting in revocation have been corrected;
   c. The Health Department conducts a reinspection and verifies compliance with this article; and
   d. All applicable licensing fees have been paid.

OFFICE OF THE CITY ATTORNEY
FARGO, NORTH DAKOTA

ORDINANCE NO. _____

E. **Closure or Restrictions on Lodging Establishment.**

1. When a violation of this article or the regulations adopted under it threatens public health or safety, the Health Department may order a lodging establishment to close or restrict the use or occupancy of affected guest rooms, facilities, equipment, amenities, or other areas. The closure or restriction must be limited to what is reasonably necessary to address the condition.

2. The Health Department may close the entire lodging establishment when the conditions affect a substantial portion of the establishment, cannot reasonably be isolated to specific areas, or otherwise make continued operation unsafe. In deciding the scope of a closure, the Health Department may consider the severity of the conditions, areas affected, risks to guests and employees, and whether unaffected areas can safely remain open.

3. Except when immediate action is authorized under subsection B, the Health Department must give written notice of a proposed closure or restriction. The notice must explain the violations or conditions, identify the affected areas, state what must be corrected, and explain the right to request a hearing under subsection G.

4. The effective date of a proposed nonemergency closure or restriction and the effect of a timely hearing request shall be governed by subsection G.

5. If a closure or restriction affects occupied guest rooms or other areas being used by guests, the owner, operator, or licensee must promptly notify those guests and take reasonable steps to ensure the affected areas are no longer used or occupied in violation of the order.

6. The Health Department may require the owner, operator, or licensee to prepare and carry out a plan to safely relocate affected guests, including identifying alternative accommodations when necessary. The Health Department shall set a deadline based on the nature and severity of the condition.

OFFICE OF THE CITY ATTORNEY
FARGO, NORTH DAKOTA

ORDINANCE NO. _____

7. The owner, operator, or licensee must cooperate with the Health Department and other appropriate City departments in carrying out a closure or restriction order. This section does not authorize physically removing an occupant unless otherwise permitted by law and does not limit the lawful authority of fire officials, law enforcement, or other emergency responders.

8. No owner, operator, or licensee shall rent, permit occupancy of, or otherwise allow use of any guest room or other portion of a lodging establishment in violation of an effective closure or restriction order issued under this article.

F. **Reopening of Restricted Areas.** Any guest room, facility, equipment, amenity, or other portion of a lodging establishment subject to a closure or restriction order shall remain closed or restricted until the Health Department determines that the conditions necessitating the order have been corrected and authorizes the resumption of use or occupancy.

The Health Department may require reinspection, supporting documentation, testing, or professional verification of corrective measures before authorizing reopening.

A closure or restriction imposed under this section shall not, by itself, constitute suspension or revocation of the lodging establishment's license.

G. **Hearings and Appeals.**

1. An owner, operator, or licensee aggrieved by a denial of an initial or renewal license, withholding of renewal, conditions imposed upon issuance, or renewal of a license, proposed or immediate suspension, proposed revocation, or closure or restriction order affecting a lodging establishment or any portion thereof may request a hearing before the Board of City Commissioners by submitting a written request received by the Health Department within ten (10) days after service of the notice.

OFFICE OF THE CITY ATTORNEY
FARGO, NORTH DAKOTA

ORDINANCE NO. _____

2. Except when immediate action is authorized under subsection B, a proposed suspension, revocation, closure, or restriction shall not become effective until expiration of the ten (10)-day hearing request period or, if a timely hearing is requested, until the Board of City Commissioners issues its decision. If no timely hearing request is received, the opportunity for an administrative hearing is waived, and the proposed action shall become effective upon expiration of the hearing request period or on a later date specified in the notice. A hearing request concerning denial of an initial or renewal license shall not authorize operation without a valid license. A hearing request concerning conditions of licensure shall not suspend any condition necessary to protect public health or safety unless otherwise ordered by the Board of City Commissioners.

3. Upon receipt of a timely written request for a hearing, the Health Department shall refer the matter to the Board of City Commissioners. The owner, operator, or licensee shall receive written notice of the date, time, and place of the hearing and shall have an opportunity to present evidence and respond to the grounds for the proposed or imposed action.

4. When immediate action has been taken pursuant to subsection B, a hearing shall be scheduled as promptly as practicable following receipt of a timely request. The request for a hearing shall not automatically stay the immediate suspension, closure, or restriction.

5. After the hearing, the Board of City Commissioners may uphold, change, or reverse the Health Department's decision. The Board shall issue a written decision identifying its determination and the effective date of any action upheld or imposed.

OFFICE OF THE CITY ATTORNEY
FARGO, NORTH DAKOTA

ORDINANCE NO. _____

Section 2. Penalty.

A person who willfully violates this ordinance is guilty of a Class B misdemeanor. Every person, firm, or corporation violating an ordinance which is punishable as a Class B misdemeanor shall be punished by a fine not to exceed $1,500.00, or by imprisonment not to exceed 30 days, or by both such fine and imprisonment, in the discretion of the court; the court to have the power to suspend said sentence and to revoke the suspension thereof. In addition to such fine and/or imprisonment, the court, in its discretion, may assess a fee in an amount not to exceed $25.00 as provided in N.D.C.C. § 27-01-10.

Section 3. Effective Date.

This ordinance shall be in full force and effect from and after its passage, approval, and publication.

_____
Joshua A. Boschee, Mayor

(SEAL)

Attest:

_____
Angie Bear, Deputy City Auditor,
on behalf of the City Auditor

First Reading:
Second Reading:
Final Passage:
Publication:

OFFICE OF THE CITY ATTORNEY
FARGO, NORTH DAKOTA

ORDINANCE NO. _____

AN ORDINANCE AMENDING SECTION 1-0305(A)(1) OF ARTICLE 1-03 OF CHAPTER 1 OF THE FARGO MUNICIPAL CODE RELATING TO CLASSIFICATION OF ORDINANCE VIOLATIONS

WHEREAS, the electorate of the City of Fargo has adopted a home rule charter in accordance with Chapter 40-05.1 of the North Dakota Century Code; and

WHEREAS, Section 40-05.1-06 of the North Dakota Century Code provides that the City shall have the right to implement home rule powers by ordinance; and

WHEREAS, Section 40-05.1-05 of the North Dakota Century Code provides that said home rule charter and any ordinances made pursuant thereto shall supersede state laws in conflict therewith and shall be liberally construed for such purpose; and

WHEREAS, the Board of City Commissioners deems it necessary and appropriate to implement such authority by the adoption of this ordinance;

NOW, THEREFORE,

Be it Ordained by the Board of City Commissioners of the City of Fargo:

Section 1. Amendment.

Section 1-0305(A)(1) of Article 1-03 of Chapter 1 of the Fargo Municipal Code is amended to read as follows:

1-0305A. - Classification of ordinance violations.

A. Violations of the following ordinances are Class B misdemeanors, subject to punishment as provided in this article:

1. Section 1-0306(D) (failure to appear or post bond on a non-criminal, non-traffic offense), section 8-0305(A)(2) (fictitious registration), section 8-0305(A)(3) (lending registration plates), section 8-0308 (reproducing operator's or driver's license or permit), section 8-0309 (driving under suspension), section 8-0310 (driving under the influence), section 8-0314 (reckless driving), section 8-0320(D) (failure to deliver plates) section 8-0803 (accidents involving damage to vehicle),

OFFICE OF THE CITY ATTORNEY
FARGO, NORTH DAKOTA

ORDINANCE NO. _____

section 8-0804 (duty to give information and render aid), section 8-0805 (duty upon striking fixture or other property), section 8-0809 (false reports), section 10-0104 (curfew), section 10-0201 (indecent exposure), section 10-0301 (disorderly conduct), section 10-0201 (indecent exposure), section 10-0301 (disorderly conduct), section 10-0317 (resisting police officer), section 10-0319 (incendiary devices), section 10-0320 (registration in schools), section 10-0321 (criminal mischief), section 10-0321.1 (criminal mischief-hate crime), section 10-0322 (harassment), section 10-0322.1 (harassment-hate crime), section 10-0323 (simple assault), section 10-0323.1 (simple assault-hate crime), section 10-0324 (aiding and abetting), section 10-0601 (shoplifting), section 10-0602 (theft), section 10-0702 (order to disperse), section 10-0703 (tenant/owner cooperation required), section 10-1202(2) (≥½ oz. marijuana) and 10-1202(3) (under 21 in possession of marijuana), section 12-0117(C) and 12-0117(G) (potentially dangerous and dangerous dogs), section 13-0511 (removal of wastes), section 13-0513 (fee/permit for hauling waste), section 13-0529 (misuse of compost sites), article 13-13 (drug lab cleanup), article 13-14 (lodging establishments), article 13-18 (massage therapy establishments), chapter 17 (sewers and sewerage), article 18-09 (excavation code), article 21-04 (dangerous buildings), section 25-0412 (unlicensed taxicab or vehicle for hire), section 25-1509(A) (selling alcoholic beverage to minor), section 25-1518(C) (minor misrepresenting age), and section 25-1518(D) (delivery of alcoholic beverage to minor), article 25-33 (tattoos, body art and body piercing), article 25-36 (tanning facilities), article 25-38 (commercial pedal car vehicles).

***

OFFICE OF THE CITY ATTORNEY
FARGO, NORTH DAKOTA

ORDINANCE NO. _____

Section 2. Effective Date.

This ordinance shall be in full force and effect from and after its passage and approval.

_____
Joshua A. Boschee., Mayor

Attest:

_____
Angie Bear, Deputy City Auditor,
on behalf of the City Auditor

First Reading:
Second Reading:
Final Passage:

OFFICE OF THE CITY ATTORNEY
FARGO, NORTH DAKOTA

(4)

ORDINANCE NO. _____

AN ORDINANCE AMENDING SECTION 38-0101 OF ARTICLE 38-01 OF CHAPTER 38 OF THE FARGO MUNICIPAL CODE RELATING TO THE CREATION OF CITY STREET LIGHTING AND TRAFFIC CONTROL DEVICES SYSTEM

WHEREAS, the electorate of the city of Fargo has adopted a home rule charter in accordance with Chapter 40-05.1 of the North Dakota Code; and,

WHEREAS, Section 40-05.1-06 of the North Dakota Century Code provides that the City shall have the right to implement home rule powers by ordinance; and,

WHEREAS, Section 40-05.1-05 of the North Dakota Century Code provides that said home rule charter and any ordinances made pursuant thereto shall supersede state laws in conflict therewith and shall be liberally construed for such purposes; and,

WHEREAS, the Board of City Commissioners deems it necessary and appropriate to implement such authority by the adoption of this ordinance;

NOW, THEREFORE,

Be It Ordained by the Board of City Commissioners of the City of Fargo:

Section 1. Amendment.

Section 38-0101 of Article 38-01 of Chapter 38 of the Fargo Municipal Code is hereby amended to read as follows:

38-0101. Creation of Street Lighting and Traffic Control Devices System Utility.-- Pursuant to the provisions of Section 40-05-01 and Chapter 40-05, N.D.C.C., all lands, easements, rights in land, facilities, poles, wires, cables, conduits, and other electrical fixtures and equipment necessary for the proper maintenance and operation thereof, together with traffic control devices, including but not limited to traffic signals, fiber optic cable, fiber optic connections, network communication devices, intersection traffic cameras and associated software, Advanced Transportation Management Software (ATMS), uninterrupted power supplies, vehicle and pedestrian detection systems, driver speed feedback signs, HAWK beacons, pedestrian flashing control devices, school speed zone flashing beacons, high-visibility pavement markings, intersection control devices, roadway signs, and any other devices, equipment, or technology deemed necessary by the City Engineer for the control, management, or regulation of pedestrian,

OFFICE OF THE CITY ATTORNEY
FARGO, NORTH DAKOTA

ORDINANCE NO. _____

bicycle, or vehicular traffic or for the operation of street lighting, heretofore or hereafter acquired by purchase, lease, or otherwise and set aside by the board of city commissioners of the city of Fargo for a municipal street lighting and traffic control devices system, are hereby declared to be and shall henceforth constitute, be held, operated, maintained, improved, enlarged, and administered as a single system to be known as the street lighting and traffic control devices system.

Section 2. Effective Date.

This ordinance shall be in full force and effect from and after its passage and approval.

_____
Josh Boschee, Mayor

Attest:

_____
Angie Bear, Deputy City Auditor

First Reading:
Second Reading:
Final Passage:

THE CITY OF
Fargo
FAR MORE

225 4th Street North
Fargo, ND 58102
Phone: 701.241.1301
Email feng@FargoND.gov
www.FargoND.gov

(2)

October 27, 2026

Board of City Commissioners
225 4th Street North
Fargo, ND 58102

Re: Proposed Amendment to Street Lighting and Traffic Control Device System Utility Definition – Fargo Municipal Code 38-0101

Dear Mayor and City Commissioners:

This amendment is intended to provide greater transparency regarding the use of funds collected through the Street Lighting and Traffic Control Device System Utility. In 2019, staff and associated responsibilities were transferred from Traffic Engineering to this utility, expanding its scope to include traffic signal devices, pavement markings, and traffic signing. This amendment further clarifies the items and activities included within the utility's definition.

Recommend Motion: I move to receive and file an Ordinance Amending Section 38-0101 of Article 38-01 of Chapter 38 of the Fargo Municipal Code Relating to City Street Lighting and Traffic Control Device System Utility, and to place the Ordinance on the agenda for the next regularly scheduled City Commission meeting for first reading.

Sincerely,

Jeremy Gorden, PE, PTOE
Division Engineer – Transportation

5

OFFICE OF THE CITY ATTORNEY
FARGO, NORTH DAKOTA

ORDINANCE NO. _____

AN ORDINANCE ENACTING SECTION 8-1027 OF ARTICLE 8-10, OF CHAPTER 8, OF THE FARGO MUNICIPAL CODE, RELATING TO WINTER PARKING RESTRICTIONS
AND
AN ORDINANCE AMENDING SECTION 1-0305 OF ARTICLE 1-03, OF CHAPTER 1, OF THE FARGO MUNICIPAL CODE, RELATING TO CLASSIFICATION OF ORDINANCE VIOLATIONS

WHEREAS, the electorate of the City of Fargo has adopted a home rule charter in accordance with Chapter 40-05.1 of the North Dakota Century Code; and

WHEREAS, Section 40-05.1-06 of the North Dakota Century Code provides that the City shall have the right to implement home rule powers by ordinance; and

WHEREAS, Section 40-05.1-05 of the North Dakota Century Code provides that said home rule charter and any ordinances made pursuant thereto shall supersede state laws in conflict therewith and shall be liberally construed for such purpose; and

WHEREAS, the Board of City Commissioners deems it necessary and appropriate to implement such authority by the adoption of this ordinance;

NOW, THEREFORE,

Be it Ordained by the Board of City Commissioners of the City of Fargo:

Section 1. Enactment

Section 8-1027 of Article 8-10, of Chapter 8, of the Fargo Municipal Code is enacted as follows:

8-1027. – Winter Parking Restrictions

(A) No person shall park or stop a vehicle or trailer on any roadway, street, or avenue in an area and during the days and hours designated by resolution of the City

OFFICE OF THE CITY ATTORNEY
FARGO, NORTH DAKOTA

ORDINANCE NO. _____

Commission, for purposes of snow removal, during the period from November 1 through April 15.

(B) The City Commission may, by resolution, designate the areas, days, and hours to which the parking restrictions established by this section shall apply.

(C) Any vehicle or trailer parked or stopped in violation of this section may be removed and impounded by the Police Department or its designee in accordance with Section 8-0126.

Section 2. Amendment

Section 1-0305 of Article 1-03, of Chapter 1, of the Fargo Municipal Code is enacted as follows:

1-0305. - Classification of ordinance violations.

...

C. Violations of the following ordinances are noncriminal offenses and shall require payment of a fee as follows:

...

14. The determination of the fees payable for parking violations described in articles 8-10, 8-17, and section 9-0705 shall be based upon the vehicle that is found to be in violation of said article and the owner of the vehicle shall be responsible for payment of the fees.

a. With respect to violations in the central business district, as defined in section 8-0101, for a violation of section 8-1006, and section 8-1009, the fee for such violation shall be $20.00 for the first violation associated with the vehicle within the prior six-month period, $20.00 for a second violation within six months of said first violation and $25.00 for a third violation within six months of the said second violation and $30.00 for the fourth violation within six months of the said third violation and for every

OFFICE OF THE CITY ATTORNEY
FARGO, NORTH DAKOTA

ORDINANCE NO. _____

subsequent violation within six months of the next-preceding violation. As to violations of sections 8-1006 and 8-1009, the person issuing the ticket for the parking violation is authorized to waive the fee and, instead, to issue a warning ticket, for the first said violation. At such time as a period of six months or more elapses without a parking ticket for any violation of article 8-10 having been issued for a particular vehicle, the next violation shall be treated as an initial violation.

b. Violations. With respect to parking violations other than in the central business district, for a violation of sections 8-1001, 8-1002, 8-1004, 8-1005, 8-1006, 8-1006.1, 8-1007, 8-1008, 8-1009, 8-1012, 8-1014 through 8-1024, 8-1026, and 8-1027 the fee for such violation shall be $20.00.

...

Section 3. Penalty.

A person who violates section 8-1027 of the Fargo Municipal Code shall be deemed to have committed a noncriminal offense and shall be punished as provided in Section 1-0305(C) of the Fargo Municipal Code, as may be amended from time to time.

Section 4. Effective Date.

This ordinance shall be in full force and effect from and after its passage, approval and publication.

_____
Joshua A. Boschee, Mayor

Attest:

_____
Angie Bear, Deputy City Auditor,
on behalf of the City Auditor

First Reading:
Second Reading and Final Passage:
Publication:

THE CITY OF Fargo FAR MORE

OFFICE OF THE CITY ATTORNEY

CITY ATTORNEY
Ian R. McLean

SERKLAND LAW FIRM
10 Roberts Street North
Fargo, ND 58102
Phone: 701.232.8957 | Fax: 701.237.4049

ASSISTANT CITY ATTORNEYS
Alissa R. Farol Czapiewski • William B. Wischer
• Kasey D. McNary • Elijah P. Hartsell

6

November 19, 2026

Board of City Commissioners
225 Fourth Street North
Fargo, ND 58102

Re: Project 2026-03 (WA2506) – J.D. Kraemer Enterprises, LLC – Settlement Agreement and Release

Dear Mayor and Commissioners:

Attached is a proposed Settlement Agreement and Release between the City of Fargo and J.D. Kraemer Enterprises, LLC ("Kraemer") concerning Water Service Replacement Project 2026-03 (WA2506). The Project involved the replacement of lead water service lines for homeowners within the City of Fargo.

The City entered into the contract with Kraemer on June 22, 2026. The contract included provisions for liquidated damages in the event Kraemer failed to complete the Project within the established completion dates. Kraemer did not complete the Project within the required deadlines, resulting in a dispute between the City and Kraemer concerning liquidated damages, the cause of the delays, and the final contract payment.

The City and Kraemer have negotiated the attached Settlement Agreement and Release to resolve these disputes and allow for final closeout of the Project. Under the proposed settlement, the City will retain $55,500 in liquidated damages from the final contract payment. Kraemer will remain responsible for any outstanding punch list work, warranty obligations, and certain lien-related obligations.

The Settlement Agreement and Release will reduce the final amount paid to Kraemer by $55,500 in recognition of the delays in completing the Project. The final payment application will reflect a remaining payment of $64,955.60 to Kraemer after deduction of the agreed upon liquidated damages.

Recommended Motion: Approve the Settlement Agreement and Release with J.D. Kraemer Enterprises, LLC for Water Service Replacement Project 2026-03 (WA2506).

Sincerely,

Ian R. McLean
City Attorney

Encl.

SETTLEMENT AGREEMENT AND RELEASE

This Settlement Agreement and Release (hereinafter "Agreement") is made and entered into by and between the City of Fargo, a North Dakota municipality ("City"), and J.D. Kraemer Enterprises, LLC, a North Dakota limited liability company ("Kraemer"). The above-named parties shall be collectively referred to herein as "the Parties."

RECITALS

A. The City and Kraemer entered into a contract for Water Service Replacement Project 2026-03 (WA2506), which consisted of replacement of lead water service lines for homeowners within the City of Fargo and associated work (the "Project").

B. The effective date of the contract between the City and Kraemer for the Project was June 22, 2026 (the "Contract"). The Notice to Proceed was sent on June 30, 2026. The Contract provided an original substantial completion date of July 10, 2026, with a final completion date of July 31, 2026. A Work Change Directive added 21 days, extending the substantial completion date to July 31, 2026, and the final completion date to August 21, 2026.

C. The Contract included provisions for the City to recover liquidated damages for each day that expired beyond the substantial and final completion dates stated in the Contract.

D. Kraemer did not complete the Project by the substantial completion date or final completion date provided in the Contract and Work Change Directive. The City contends it is owed liquidated damages. Kraemer disputes the City is owed liquidated damages.

E. A dispute arose between the City and Kraemer regarding the amount of final payment, liquidated damages, cause of delays, and other related matters.

F. The Parties disagree as to the validity, extent, and amount of the claims and wish to avoid the uncertainty, expense, and delay of litigation or other dispute resolution proceedings.

G. The Parties now desire to enter into this Agreement to provide for a comprehensive and complete settlement and discharge of all claims and defenses which any party made or could have made by reason of the events described above and upon the terms and conditions set forth below.

AGREEMENT

The Parties agree as follows:

1.0 Release and Discharge

1.1 In consideration of the financial terms set forth below, Kraemer hereby releases and forever discharges, the City, its insurers, agents, representatives and employees, from any and all past, present, and future claims, demands, obligations, actions, causes of action, rights, damages, costs, interest, attorney's fees, expenses and compensation of any nature whatsoever related to the Project and the Contract, which Kraemer might have brought against the City and which could, in any way, arise out of the events described in the Recitals above.

1.2 In consideration of the financial terms set forth below, the City hereby releases and forever discharges Kraemer, its directors, officers, members, governors, agents, representatives, and employees, from any and all past, present, and future claims, demands, obligations action, causes of action, rights, damages, costs, interest, attorney's fees, expenses and compensation of any nature whatsoever related to the Project and the Contract, which the City might have brought against Kraemer and which could, in any way, arise out of the events described in the Recitals above.

Provided, however, that the Parties hereby mutually agree that this release shall not extend to any remaining punch list work or warranty work Kraemer is obligated to complete under the terms of the Project and/or Contract. The Parties further mutually agree that this release does not extend to any other contracts or projects which may exist between the Parties at the time of the effective date of this Agreement.

1.3 The Parties acknowledge and agree that the release and discharge set forth above is a waiver of all claims and defenses the Parties might have asserted, and a general release regarding causes of action they might have brought regarding the events described in the above Recitals, including any obligation to pay damages, attorney's fees, and costs. It is understood and agreed by the Parties that this settlement is a compromise reached in order to resolve the disputes described in the Recitals above.

1.4 The Parties waive the provisions of N.D.C.C. § 9-13-02, or any similar or other applicable state or federal statute or regulation, which provides that a general release does not extend to claims a creditor does not know or suspect to exist in its favor at the time of executing the release, which if known by it, would have materially affected the settlement with the debtor.

1.5 This Agreement is entered solely for the purpose of compromising disputed claims and avoiding the expense and uncertainty of litigation. Nothing contained in this Agreement shall be construed as an admission by either of the Parties of any liability or breach of the Contract.

2.0 Financial Terms

2.1 The City shall retain the total amount of Fifty-Five Thousand Five-Hundred Dollars and No Cents ($55,500.00) comprising the City's liquidated damages incurred by delays in completion of the Project. The City shall retain the liquidated damages amount from the final pay application processing. The remaining amount owed to Kraemer under the Contract, subject to final adjustments as provided therein, shall be processed through a final pay application and issuance of funds to Kraemer coordinated by the City Finance Department and Houston Engineering, Inc., as the City's representative (the "Close Out Payment"). The Close Out Payment will be issued to Kraemer within fourteen (14) days following final approval of this Agreement by the Fargo City Commission and signature by the Mayor. A final change order showing the adjusted final payment to close out the Project shall be included with the Close Out Payment. No other payments shall be made by the City to Kraemer.

3.0 Lien Release and Indemnity

3.1 Any statutory liens or encumbrances, including but not limited to mechanic's liens, materialman's liens, and construction liens, which Kraemer may have been permitted to file or record against the Project are hereby released and forever discharged.

3.2 If any subcontractor of Kraemer or its affiliates asserts liens or encumbrances against any of the properties included within the Project, Kraemer hereby agrees to immediately pay, satisfy, discharge, and remove the liens, at Kraemer's sole cost and expense. Kraemer shall also defend, indemnify, and hold harmless the City and any impacted homeowners from and against every lien claim, proceedings, losses, damages, costs, and expenses, including reasonable attorney's fees and costs incurred to defend against, contest, discharge, or remove the lien.

3.3 Kraemer's obligations under this section are independent of the releases and other obligations contained herein and shall survive execution of this Agreement, payment of any amounts, completion of the underlying work, and any release otherwise granted to Kraemer herein.

4.0 Completion of Warranty Work

Kraemer hereby acknowledges and agrees that it will complete warranty work on the Project as required by the terms and conditions of the Contract.

5.0 Representation of Comprehension of Document

In entering into this Settlement Agreement and Release, the Parties represent that they have relied upon the advice of their attorneys, who are attorneys of their own choice,

concerning the legal consequences of this Agreement; that the terms of this Agreement have been completely read and explained by their attorneys; and that the terms of this Agreement are fully understood and voluntarily accepted.

6.0 Warranty of Capacity to Execute Agreement

Kraemer represents and warrants that no other person or entity has any interest in the Contract, rights to payment, claims, or defenses referred to in this Agreement, and that Kraemer has the sole right and exclusive authority to execute this Agreement and receive the sum specified herein.

7.0 Governing Law

This Agreement shall be construed and interpreted in accordance with the laws of the State of North Dakota.

8.0 Additional Documents

The Parties agree to cooperate fully and approve and execute any and all supplementary documents and to take all additional actions which may be necessary or appropriate to give full force and effect to the basic terms and intent of this Agreement.

9.0 Entire Agreement and Successors in Interest

This Settlement Agreement and Release contains the entire agreement between Kraemer, its directors, officers, members, governors, agents, representatives, and employees, and the City of Fargo, its insurers, employees, agents and representatives with regard to the matters set forth in it and shall be binding upon and inure to the benefit of the beneficiaries, executors, administrators, personal representatives, heirs, successors and assigns of each. This Agreement may not be amended, modified, or supplemented except by a written instrument signed by both Parties.

10.0 Effectiveness

This Settlement Agreement and Release shall become effective immediately following execution by each of the Parties. Notwithstanding the foregoing releases, nothing in this Agreement shall release or discharge the Parties from their respective obligations hereunder or preclude either party from bringing an action to enforce the terms of this Agreement.

THIS IS A RELEASE. READ BEFORE SIGNING.

Dated: 11/6/2026

Christopher Kraemer

J.D. Kraemer Enterprises, LLC

By: Christopher Kraemer

Its: CEO

Dated: _____

_____

City of Fargo
By: Joshua Boschee
Its: Mayor

ATTEST:

_____

Angie Bear
Deputy Auditor on behalf of City Auditor

EJCDC
ENGINEERS JOINT CONTRACT DOCUMENTS COMMITTEE

Contractor's Application for Payment No. 2

To (Owner): City of Fargo Water Treatment Plant	Application Period: 8/20/2026 through 10/28/2026	Application Date: 10/28/0226
Project: **Water Service Replacement Project 2026-03**	From (Contractor): J.D. Kraemer Enterprises, LLC	Via (Engineer): Houston Engineering, Inc.
Owner's Contract No.: WA2506	Contract:	
	Contractor's Project No.:	Engineer's Project No.: 6059-0211

Application For Payment

Change Order Summary

Approved Change Orders

Number	Additions	Deductions
1	$35,232.50	$121,984.00
TOTALS	$35,232.50	$121,984.00
NET CHANGE BY CHANGE ORDERS	-$86,751.50	

1. ORIGINAL CONTRACT PRICE	$	$308,212.00
2. Net change by Change Orders	$	-$86,751.50
3. Current Contract Price (Line 1 ± 2)	$	$221,460.50
4. TOTAL COMPLETED, CHANGE ORDER, AND STORED TO DATE (Column F total on Progress Estimates)	$	$221,460.50
5. RETAINAGE:		
a. 5% X _____ Work Completed	$	
b. 5% X _____ Stored Material	$	
c. Total Retainage (Line 5.a + Line 5.b)	$	
6. AMOUNT ELIGIBLE TO DATE (Line 4 - Line 5.c)	$	$221,460.50
7. LESS PREVIOUS PAYMENTS (Line 6 from prior Application)	$	$156,504.90
8. AMOUNT DUE THIS APPLICATION	$	$64,955.60
9. BALANCE TO FINISH, PLUS RETAINAGE (Column G total on Progress Estimates + Line 5.c above)	$	0.00

Contractor's Certification

The undersigned Contractor certifies, to the best of its knowledge, the following:
(1) All previous progress payments received from Owner on account of Work done under the Contract have been applied on account to discharge Contractor's legitimate obligations incurred in connection with the Work covered by prior Applications for Payment;
(2) Title to all Work, materials and equipment incorporated in said Work, or otherwise listed in or covered by this Application for Payment, will pass to Owner at time of payment free and clear of all Liens, security interests, and encumbrances (except such as are covered by a bond acceptable to Owner indemnifying Owner against any such Liens, security interest, or encumbrances); and
(3) All the Work covered by this Application for Payment is in accordance with the Contract Documents and is not defective.

Contractor Signature

By: Christopher Kraemer Date: 11/6/26

Payment of: $ 64,955.60
(Line 8 or other - attach explanation of the other amount)

is recommended by: _____ _____
(Engineer) (Date)

Payment of: $ 64,955.60
(Line 8 or other - attach explanation of the other amount)

is approved by: _____ _____
(Owner) (Date)

Approved by: _____ _____
Funding or Financing Entity (if applicable) (Date)

© 2013 National Society of Professional Engineers for EJCDC. All rights reserved.

Progress Estimate - Unit Price Work **Contractor's Application**

For (Contract):	Water Service Replacement Project 2026-03										Application Number:	2		
Application Period:	8/20/2026 through 10/28/2026										Application Date:	10/28/0226		
A								B	C	D	E	F		
Item				Contract Information										
Bid Item No.	Description		Bid Qty	Bid Qty plus CO Qty	Units	Unit Price	Bid Value	Total Value of Item ($)	Estimated Quantity Installed	Value of Work Installed to Date	Materials Presently Stored (not in C)	Total Completed and Stored to Date (D + E)	% (F / B)	Balance to Finish (B - F)
1	SPECIAL	Site Mobilization	30	31	EA	$300.00	$9,000.00	$9,300.00	31	$9,300.00		$9,300.00	100.0%	
2	SPECIAL	Public Water Service, Bored or Pulled, 1" Dia Water Service	38		LF	$125.00	$4,750.00							
3	SPECIAL	Private Water Service, Bored or Pulled, 1" Dia Water Service	1038	1269.5	LF	$115.00	$119,370.00	$145,992.50	1269.5	$145,992.50		$145,992.50	100.0%	
4	1400-PN5X-D0010	Public Water Service, F&I Pipe 1" Dia Water Service	20		LF	$90.00	$1,800.00							
5	1400-PN5X-D0010	Private Water Service, F&I Pipe 1" Dia Water Service	104		LF	$90.00	$9,360.00							
6	1400-RW20-D0010	Rem & Repl CS & Box 1" Dia	1	3	EA	$1,100.00	$1,100.00	$3,300.00	3	$3,300.00		$3,300.00	100.0%	
7	1400-SH20-00000	Connect Water Service	1		EA	$2,500.00	$2,500.00							
8	1400-SY20-00000	Eliminate Water Service	1		EA	$1,400.00	$1,400.00							
9	SPECIAL	Connect Water Service to Meter	30	28	EA	$2,100.00	$63,000.00	$58,800.00	28	$58,800.00		$58,800.00	100.0%	
10	SPECIAL	Site Restoration	300	372.2	SY	$50.00	$15,000.00	$18,610.00	372.2	$18,610.00		$18,610.00	100.0%	
11	4100-0010-XT001	Traffic Control	1	1	LS	$2,000.00	$2,000.00	$2,000.00	1	$2,000.00		$2,000.00	100.0%	
12	2100-RW50-00000	Rem & Repl Curb & Gutter	36		LF	$100.00	$3,600.00							
13	2100-VW7C-K0070	Rem & Repl Pavement 7" Thick Reinf Conc	32		SY	$126.00	$4,032.00							
14	2300-AW7C-K0040	Rem & Repl Sidewalk 4" Thick Reinf Conc	143	13.4	SY	$100.00	$14,300.00	$1,340.00	13.4	$1,340.00		$1,340.00	100.0%	
15	2300-DW7C-K0060	Rem & Repl Driveway 6" Thick Reinf Conc	150	39	SY	$112.00	$16,800.00	$4,368.00	39	$4,368.00		$4,368.00	100.0%	
16	SPECIAL	Sanitary Sewer Service Televising	60	59	EA	$250.00	$15,000.00	$14,750.00	59	$14,750.00		$14,750.00	100.0%	
17	SPECIAL	Water Meter Relocation	150		LF	$20.00	$3,000.00							
18	SPECIAL	Primary Electrical Grounding Systems Installation	8	5	EA	$900.00	$7,200.00	$4,500.00	5	$4,500.00		$4,500.00	100.0%	
19	SPECIAL	Reconnection of Water Service Electrical Jumper Cable	22	23	EA	$500.00	$11,000.00	$11,500.00	23	$11,500.00		$11,500.00	100.0%	
20	SPECIAL	Sewer Service Repair	8	1	EA	$500.00	$4,000.00	$500.00	1	$500.00		$500.00	100.0%	
21 (CO 02)	SPECIAL	Curb Box	-	5	EA	$400.00	-	$2,000.00	5	$2,000.00		$2,000.00	100.0%	
22 (CO 02)	SPECIAL	Liquidated Damages	-	1	LS	-$55,500.00	-	-$55,500.00	1	-$55,500.00		-$55,500.00	100.0%	
	Totals						$308,212.00	$221,460.50		$221,460.50		$221,460.50	100.0%	$ -

Pertains to the following Addresses:

1505 2nd Avenue South
1514 2nd Avenue South
1521 2nd Avenue South
1522 2nd Avenue South
1618 2nd Avenue South
1622 2nd Avenue south
1627 2nd Avenue south
201 16th Street South
1017 7th Avenue North
1019 7th Avenue North
815 12th Street North
822 8th Street North

© 2013 National Society of Professional Engineers for EJCDC. All rights reserved.

CHANGE ORDER NO. 2

HOUSTON engineering, inc.

Project Name: Water Service Replacement Project 2026-03

Contract dated: 06/22/2026

Owner: City of Fargo

To: JD Kraemer Enterprises, LLC
PO Box 2303
Fargo, ND 58108

HEI Project No. 6059-0211

This change is requested by Owner and made under the terms of or is supplemental to your present contract. When approved, you are ordered to perform the work in accordance with the additions, changes, or alterations hereinafter described.

Description of Change:

Final balancing change order to balance out the remaining quantities for work installed/performed.

Item No.	Description		Unit	Bid Qty.	Bid Qty Plus CO Qty	Qty Change	Unit Price	Adjustment
1	SPECIAL	Site Mobilization	EA	30	31	1	$ 300.00	$ 300.00
2	SPECIAL	Public Water Service, Bored or Pulled, 1" Dia Water Service	LF	38	0	-38	$ 125.00	$ (4,750.00)
3	SPECIAL	Private Water Service, Bored or Pulled, 1" Dia Water Service	LF	1038	1269.5	231.5	$ 115.00	$ 26,622.50
4	1400-PNSX-D0010	Public Water Service, F&I Pipe 1" Dia Water Service	LF	20	0	-20	$ 90.00	$ (1,800.00)
5	1400-PNSX-D0010	Private Water Service, F&I Pipe 1" Dia Water Service	LF	104	0	-104	$ 90.00	$ (9,360.00)
6	1400-RW20-D0010	Rem & Repl CS & Box 1" Dia	EA	1	3	2	$ 1,100.00	$ 2,200.00
7	1400-SH20-00000	Connect Water Service	EA	1	0	-1	$ 2,500.00	$ (2,500.00)
8	1400-SY20-00000	Eliminate Water Service	EA	1	0	-1	$ 1,400.00	$ (1,400.00)
9	SPECIAL	Connect Water Service to Meter	EA	30	28	-2	$ 2,100.00	$ (4,200.00)
10	SPECIAL	Site Restoration	SY	300	372.2	72.2	$ 50.00	$ 3,610.00
11	4100-0010-XT001	Traffic Control	LS	1	1	0	$ 2,000.00	$ -
12	2100-RW50-00000	Rem & Repl Curb & Gutter	LF	36	0	-36	$ 100.00	$ (3,600.00)
13	2100-VW7C-K0070	Rem & Repl Pavement 7" Thick Reinf Conc	SY	32	0	-32	$ 126.00	$ (4,032.00)
14	2300-AW7C-K0040	Rem & Repl Sidewalk 4" Thick Reinf Conc	SY	143	13.4	-129.6	$ 100.00	$ (12,960.00)
15	2300-DW7C-K0060	Rem & Repl Driveway 6" Thick Reinf Conc	SY	150	39	-111	$ 112.00	$ (12,432.00)
16	SPECIAL	Sanitary Sewer Service Televising	EA	60	59	-1	$ 250.00	$ (250.00)
17	SPECIAL	Water Meter Relocation	LF	150	0	-150	$ 20.00	$ (3,000.00)
18	SPECIAL	Primary Electrical Grounding Systems Installation	EA	8	5	-3	$ 900.00	$ (2,700.00)
19	SPECIAL	Reconnection of Water Service Electrical Jumper Cable	EA	22	23	1	$ 500.00	$ 500.00
20	SPECIAL	Sewer Service Repair	EA	8	1	-7	$ 500.00	$ (3,500.00)
21 (New)	SPECIAL	Curb Box	EA	0	5	5	$ 400.00	$ 2,000.00
22 (New)	SPECIAL	Liquidated Damages	LS	0	1	1	$ (55,500.00)	$ (55,500.00)
							Net Increase this Change Order:	$ (86,751.50)

Quantities shown are not necessarily pay quantities and are subject to change.

Original Contract Amount: $ 308,212.00

Prior Change Orders: $ -

This Change Order: $ (86,751.50)

Total Contract Amount after this Change Order: $ 221,460.50

Approved: _____ Date: _____
(Owner)

Approved: David E. Hoff Date: 10/28/2026
(Engineer)

Approved: Christopher Kraemer Date: 11/6/26
(Contractor)

THE CITY OF Fargo FAR MORE | AUDITOR'S OFFICE

AUDITOR'S OFFICE
Fargo City Hall
225 4th Street North
PO Box 2471
Fargo, ND 58108
Phone: 701.241.1301
FargoND.gov

7

MEMORANDUM

TO: BOARD OF CITY COMMISSIONERS

FROM: AUDITOR'S OFFICE

DATE: NOVEMBER 23, 2026

SUBJECT: GAMES OF CHANCE APPLICATIONS

To review any of the listed Games of Chance Applications, please contact the Auditor's Office.

RECOMMENDED MOTION: To approve the Applications for Games of Chance as presented.

El Zagal Shrine Arab Patrol for a raffle on 3/12/27.

SCI – Red River Valley Center for a raffle & raffle board on 12/12/26.

St. John Paul II Catholic School for a raffle & raffle board on 2/5/27.

St. John Paul II Catholic Schools for a raffle on 4/24/27.

REPORT OF ACTION

PUBLIC WORKS PROJECTS EVALUATION COMMITTEE

8

Improvement District No. BR-28-E0 Type: Amendment #1

Location: 1st Ave N, University Dr – 3rd St N Date of Hearing: 11/16/2026

Routing	Date
City Commission	11/23/2026
PWPEC File	X
Project File	Shane Geraghy

The Committee reviewed the accompanying correspondence from Project Manager, Shane Geraghty, regarding Amendment #1 in the amount of $109,505.00, for additional work.

Staff is recommending approval of Amendment #1 in the amount of $109,505.00, bringing the total contract amount to $860,164.00.

On a motion by Ben Dow, seconded by Josh Boschee, the Committee voted to recommend approval of Amendment #1 to WSB, LLC.

RECOMMENDED MOTION

Concur with the recommendation of PWPEC and approve Amendment #1 in the amount of $109,505.00, bringing the total contract amount to $860,164.00 to WSB, LLC.

PROJECT FINANCING INFORMATION:

Recommended source of funding for project: Federal Funds, Utility Funds, Sales Tax & Special Assessments

	Yes	No
Developer meets City policy for payment of delinquent specials	N/A	
Agreement for payment of specials required of developer	N/A	
Letter of Credit required (per policy approved 5-28-13)	N/A	

COMMITTEE	Present	Yes	No	Unanimous
				☑
Josh Boschee, Mayor	☑	☑	☐	
Nicole Crutchfield, Director of Planning	☑	☑	☐	
Gary Lorenz, Fire Chief	☑	☑	☐	
Michael Redlinger, City Administrator	☑	☑	☐	
Ben Dow, Director of Operations	☑	☑	☐	
Tom Knakmuhs, City Engineer	☑	☑	☐	
Susan Thompson, Finance Director	☑	☑	☐	

ATTEST:

Tom Knakmuhs, P.E.
City Engineer

C: Kristi Olson

CITY OF Fargo FAR MORE

Engineering Department
225 4th Street North
Fargo, ND 58102
Phone: 701.241.1545 | Fax: 701.241.8101
Email feng@FargoND.gov
www.FargoND.gov

Memorandum

To: PWPEC

From: Shane Geraghty, PE, Civil Engineer

Date: November 16, 2026

Re: WSB Amendment #1 – Phase II ESA Soil Borings
Project No. BR-28-E0

Background:

Project BR-28-E is a roadway reconstruction project for 1st Ave N from 3rd St N to University Drive. The project will complete sanitary sewer and storm sewer improvements, new watermain, street lighting, concrete paving, concrete sidewalk and driveway replacement and signal system improvements. This project if funded by federal and local funding. WSB was hired as the Project Managers for the project due to the complexities of federally funded projects. The City of Fargo is completing the design.

Due to the project receiving federal funding, a Phase I Environmental Site Assessment (ESA) was required on the entire 1st Ave N project corridor. The ESA reviews the historical context of the corridor to determine if there are any areas with high risk for environmental impacts. The results of the ESA found previous uses such as printing businesses, filling stations, auto repair facilities, dry cleaners and underground storage tanks which pose risks of potential ground contamination.

Due to these increased risks, a Phase II ESA is required for further investigation. Phase II ESA was not part of the original scope due to the uncertainty of results of the Phase I ESA. This additional ESA includes collecting soils borings at areas of increased risk where future underground utility excavations will occur. In addition, the soil will be laboratory tested to determine if there is contamination. This data will help determine the extents and quantities of contaminated soils and will be necessary for the project team to develop a plan for the proper handling and disposal of said possible contaminated soil, if found to be present through this investigation efforts.

WSB is requesting a contract amendment of $109,505 to complete the 29 soil borings, laboratory testing and modeling and visualization for preparation of the Phase II ESA. The attached amendment request outlines the proposed services and a proposed soil boring map.

Recommendation Motion:

Approve Amendment #1 in the amount of $109,505 to WSB.

wsb

Memorandum

To: Shane Geraghty, City of Fargo Engineering Department

From: Travis Wieber, WSB

Date: November 16, 2026

Re: City Project No. 1st Avenue North Reconstruction, Improvement District No. BR-28-E0

Subject: Contract Amendment Request, Phase II Environmental Investigation and Additional Visualization Services

---

WSB is requesting a contract amendment for additional services associated with the 1st Avenue North Reconstruction Project. The amendment includes a Phase II Environmental Investigation to evaluate potential contaminated soil and groundwater conditions within the proposed construction limits, along with additional modeling and visualization services completed in support of the October 2026 public open house.

I. 1. Phase II Environmental Investigation

The Phase II investigation will further evaluate recognized environmental conditions identified along the corridor and provide information necessary to assess potential impacts to planned roadway and utility excavations. The proposed scope includes:

- **Investigation Planning and Coordination:** Develop the Phase II investigation work plan, coordinate with the City, laboratory, and drilling subcontractor, and identify proposed boring locations based on historical land uses, potential contamination sources, and anticipated construction excavation limits.
- **Field Investigation and Sampling:** Coordinate utility locates and boring locations, oversee drilling of 29 proposed soil borings totaling approximately 510 linear feet, and collect soil and groundwater samples as appropriate. Boring depths range from 10 to 20 feet and are targeted to evaluate areas of anticipated roadway and utility excavation.
- **Laboratory Testing:** Analyze selected soil and groundwater samples for potential contaminants, including petroleum hydrocarbons, volatile organic compounds (VOCs), metals, and polycyclic aromatic hydrocarbons (PAHs).
- **Documentation and Reporting:** Prepare soil boring logs, review and evaluate laboratory results, and document environmental findings. The investigation report will help inform construction planning, excavation considerations, and potential contaminated material management requirements.

The proposed fee includes professional services, drilling subcontractor costs, laboratory testing, and associated field expenses.

Phase II Investigation Fee Summary

Description	**Estimated Fee**
Phase II Investigation Work Plan	$6,454
Field Investigation, Coordination, and Reporting	$45,490
Drilling, Laboratory Testing, and Field Expenses	$51,891
Phase II Investigation Subtotal	**$103,835**

4207 28TH AVENUE S | SUITE 120 | FARGO, ND | 58104 | 701.707.9808 | WSBENG.COM

II. 2. Additional Modeling and Visualization for October 2026 Public Open House
WSB completed additional design modeling and visualization services to support the public open house held in October 2026. This effort included further development and refinement of the project design model and preparation of more detailed visualizations to communicate the proposed roadway improvements, design concepts, and key project features.

These enhancements provided the City and project team with improved visual materials to communicate the proposed improvements and help residents and stakeholders better understand the project.

The additional effort included 30 hours of modeling and visualization services at an hourly rate of $189.

Visualization Fee: 30 hours × $189/hour = **$5,670**

III. Total Proposed Contract Amendment

Description	**Amount**
Phase II Environmental Investigation	$103,835
Additional Modeling and Visualization	$5,670
Total Proposed Amendment	**$109,505**

WSB requests the City's approval of the additional scope and associated fee of **$109,505**, including the completed visualization services and proposed Phase II Environmental Investigation.

Proposed Estimate of Hours and Fee
Phase II Investigation
1st Avenue North Reconstruction Project - Improvement District No. BR-28-E0
Fargo, North Dakota 58102

Task	Description	Director of EIR - Ryan Spencer	Project Manager - Ben Fehr	Env. Scientist - Rich Fons	Env. Scientist - Casey Lucht	Env. Scientist - Liz Walker	Env. Scientist - Gentry Musgrove	Env Scientist - Nate Doeringsfeld	GIS Specialist - Gen Bolling	Total Hours	Total Labor Fee
1	**Phase II Investigation Work Plan**										
1.1	PM - Meetings	2.0	4.0							6.0	$ 1,328
1.2	Lab-Driller Bid Coordination		6.0							6.0	$ 1,170
1.3	Work Plan	5.0	10.0						6.0	21.0	$ 3,956
Task 1 - Total Estimated Hours and Fee		7.0	20.0	0.0	0.0	0.0	0.0	0.0	6.0	33.0	**$ 6,454**
Task 1 Total Cost - Phase II Investigation Work Plan											**$ 6,454**
2	**Phase II Investigation**										
2.1	PM - Meetings	4.0	6.0	4.0		4.0				18.0	$ 3,462
2.2	Lab-Driller Coordination and Contracting	2.0	8.0	2.0						12.0	$ 2,438
2.3	Travel / Preparation		2.0	20.0		10.0				32.0	$ 5,030
2.4	Boring Staking / Utility Meet		2.0	10.0					4.0	16.0	$ 2,464
2.5	Drilling Oversight and Sampling		8.0	60.0		60.0				128.0	$ 19,500
2.6	Boring Logs		2.0	6.0	16.0					24.0	$ 4,020
2.7	Report / Review	6.0	12.0	12.0		10.0			12.0	52.0	$ 8,576
Task 2 - Total Estimated Hours and Fee		12.0	40.0	114.0	16.0	84.0	0.0	0.0	16.0	282.0	**$ 45,490**

2b	Subcontractor, Equipment & Expenses		Quantity	Rate	Unit	
1	Lab	Eurofins Quote 31021239	1	$26,546.00	each	$ 26,546
1	Drilling	Range Environmental Drilling Quote #10629 (Revised)	1	$23,045.00	each	$ 23,045
1	Per Diem	One staff - 1 day staking; Two staff - up to 5 days drilling	11	$50.00	day	$ 550
1	Lodging	Two staff - up to 5 nights	10	$175.00	night	$ 1,750
Task 2b - Total Estimated Expenses						**$ 51,891**
Task 2 Total Cost - Phase II Investigation						**$ 97,381**

Total Estimated Hours	19.0	60.0	114.0	16.0	84.0	0.0	0.0	22.0	315.0	
Hourly Billing Rate - 2027 Standard	$ 274.00	$ 195.00	$ 165.00	$ 165.00	$ 134.00	$ 134.00	$ 118.00	$ 106.00		
Total Fee by Labor Classification	**$ 5,206.00**	**$ 11,700.00**	**$ 18,810.00**	**$ 2,640.00**	**$ 11,256.00**	$ -	$ -	**$ 2,332.00**	**$ 51,944.00**	
Total Proposed Fee (Labor, Expenses and Subcontractors)										**$ 103,835**

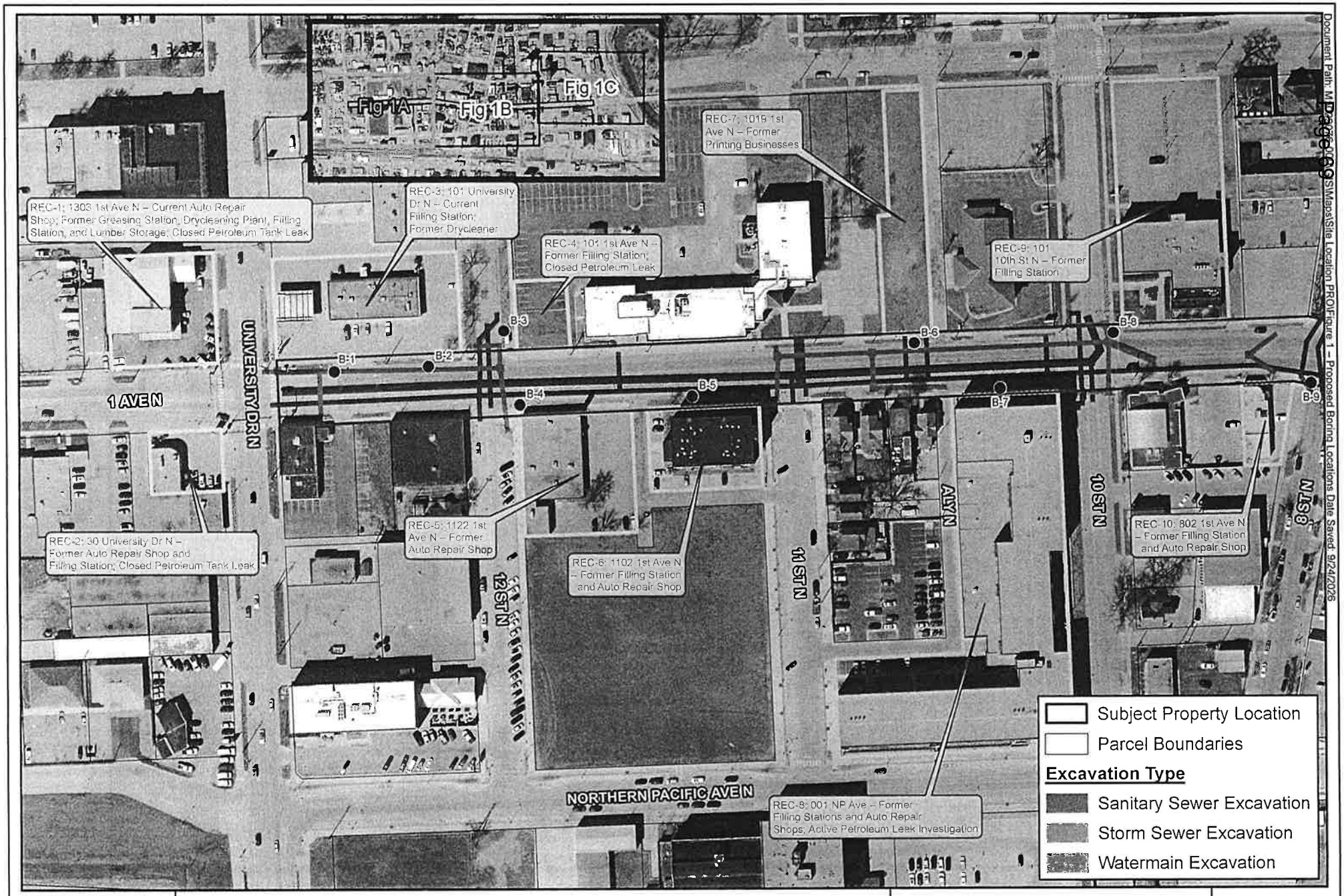

Document Path: M:\...\Site Location PRO\Figure 1 – Proposed Boring Locations Date Saved: 9/24/2026

THE CITY OF Fargo FAR MORE

Figure 1A - Proposed Boring Locations

Phase II Investigation Work Plan
1st Ave N Street Reconstruction Project
Fargo, North Dakota 58102

N

0 160 Feet
1 inch = 160 feet

wsb

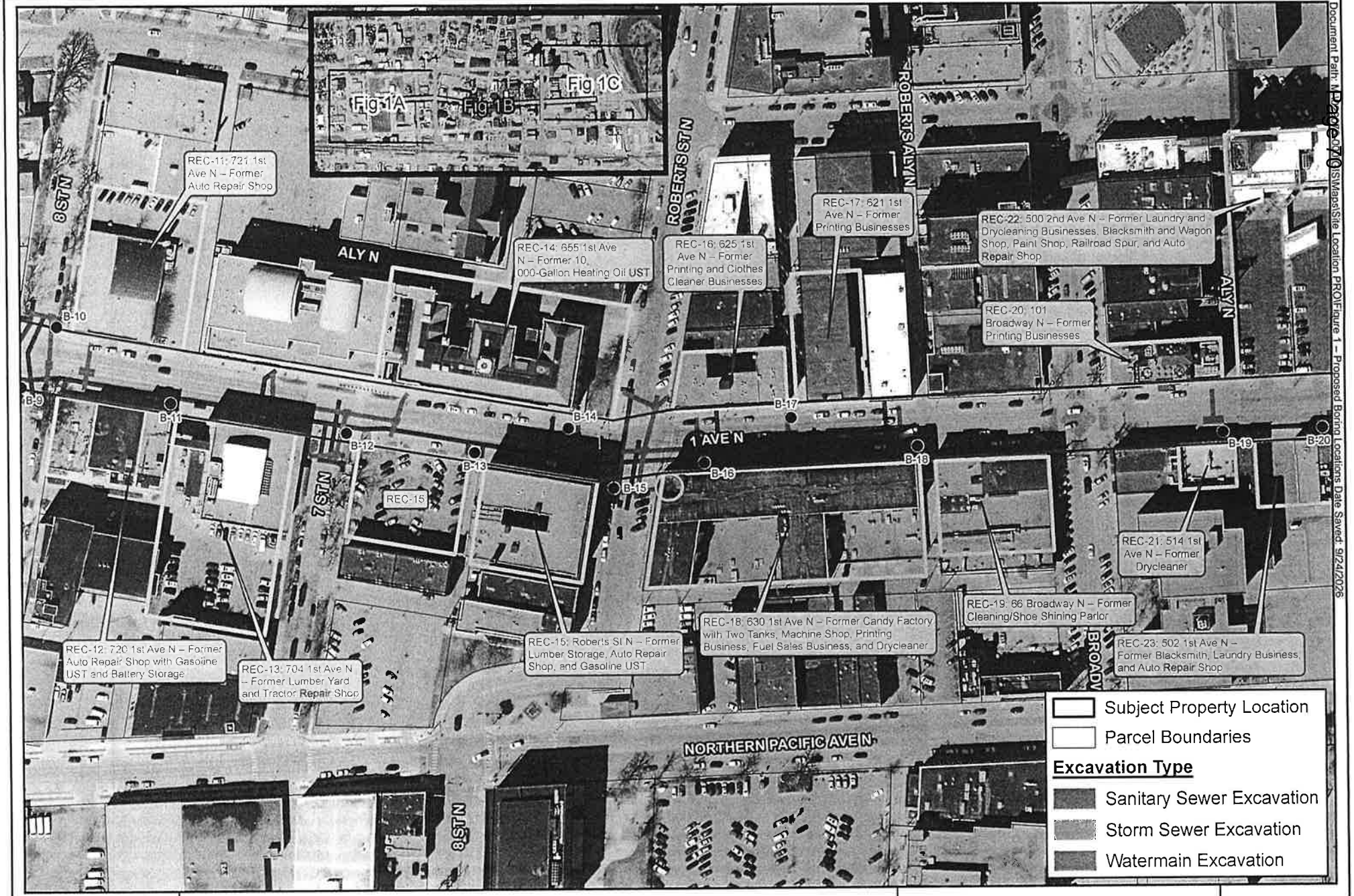

Document Path: M:\Projects\07\GIS\Maps\Site Location PRO\Figure 1 – Proposed Boring Locations Date Saved: 9/24/2026

THE CITY OF Fargo FAR MORE

Figure 1B - Proposed Boring Locations

Phase II Investigation Work Plan
1st Ave N Street Reconstruction Project
Fargo, North Dakota 58102

N

0 160 Feet

1 inch = 160 feet

wsb



Figure 1C - Proposed Boring Locations

Phase II Investigation Work Plan
1st Ave N Street Reconstruction Project
Fargo, North Dakota 58102

N

0 160 Feet

1 inch = 160 feet

Document Path: P:\GIS\Maps\Site Location PROI\Figure 1 – Proposed Boring Locations Date Saved: 9/24/2025

Table 1 - Phase II Investigation Work Plan
1st Avenue North Street Reconstruction Project
Improvement District No. BR-28-E0
Fargo, North Dakota 58102

Boring ID	Boring Depth (feet)	Proposed Investigation Location [1]	Soil Samples [2]	Groundwater Samples [3]	Boring Placement Strategy and Sampling Rationale
B-1	20	North side of 1st Ave N; 80 ft east of University Dr N	Up to 2 samples TPH GRO, TPH DRO, VOCs, RCRA Metals, PAHs	Up to 1 sample TPH GRO, TPH DRO, VOCs, RCRA Metals (dissolved), PAHs	Storm sewer / sanitary sewer excavation South of REC-3: 101 University Dr N – Current Filling Station; Former Drycleaner
B-2	20	North side of 1st Ave N; approx. 70 ft west of 12th St N	Up to 2 samples TPH GRO, TPH DRO, VOCs, RCRA Metals, PAHs	None	Storm sewer / sanitary sewer excavation South of REC-3: 101 University Dr N – Current Filling Station; Former Drycleaner
B-3	20	East side of 12th St N; approx. 50 ft north of 1st Ave N	Up to 2 samples TPH GRO, TPH DRO, VOCs, RCRA Metals, PAHs	Up to 1 sample TPH GRO, TPH DRO, VOCs, RCRA Metals (dissolved), PAHs	Watermain / storm sewer / sanitary sewer excavation West of REC-4: 1101 1st Ave N – Former Filling Station; Closed Petroleum Leak
B-4	20	South side of 1st Ave N; approx. 25 ft east of 12th St N	Up to 2 samples TPH GRO, TPH DRO, VOCs, RCRA Metals, PAHs	None	Watermain / storm sewer / sanitary sewer excavation North of REC-5: 1122 1st Ave N – Former Auto Repair Shop
B-5	20	South side of 1st Ave N, approx. 90 ft west of 11th St N	Up to 2 samples TPH GRO, TPH DRO, VOCs, RCRA Metals, PAHs	Up to 1 sample TPH GRO, TPH DRO, VOCs, RCRA Metals (dissolved), PAHs	Watermain sanitary sewer excavation North of REC-6: 1102 1st Ave N – Former Filling Station and Auto Repair Shop
B-6	20	North side of 1st Ave N, approx. 125 ft east of 11th St N	Up to 2 samples TPH GRO, TPH DRO, VOCs, RCRA Metals, PAHs	None	Watermain / storm sewer / sanitary sewer excavation South of REC-7: 1019 1st Ave N – Former Printing Businesses
B-7	20	South side of 1st Ave N; approx. 90 ft west of 10th St N	Up to 2 samples TPH GRO, TPH DRO, VOCs, RCRA Metals, PAHs	Up to 1 sample TPH GRO, TPH DRO, VOCs, RCRA Metals (dissolved), PAHs	Watermain / sanitary sewer excavation North of REC-8: 1001 NP Ave – Former Filling Stations and Auto Repair Shops; Active Petroleum Leak Investigation
B-8	20	Northeast corner of 1st Ave N & 10th St N	Up to 2 samples TPH GRO, TPH DRO, VOCs, RCRA Metals, PAHs	Up to 1 sample TPH GRO, TPH DRO, VOCs, RCRA Metals (dissolved), PAHs	Watermain / storm sewer / sanitary sewer excavation Southwest of REC-9: 101 10th St N – Former Filling Station
B-9	20	Southwest corner of 1st Ave N & 8th St N	Up to 2 samples TPH GRO, TPH DRO, VOCs, RCRA Metals, PAHs	Up to 1 sample TPH GRO, TPH DRO, VOCs, RCRA Metals (dissolved), PAHs	Watermain / storm sewer / sanitary sewer excavation East of REC-10: 802 1st Ave N – Former Filling Station and Auto Repair Shop
B-10	20	Northeast corner of 1st Ave N & 8th St N	Up to 2 samples TPH GRO, TPH DRO, VOCs, RCRA Metals, PAHs	None	Watermain / storm sewer / sanitary sewer excavation West of REC-11: 721 1st Ave N – Former Auto Repair Shop
B-11	10	South side of 1st Ave N; approx. 140 ft east of 8th St N	Up to 2 samples TPH GRO, TPH DRO, VOCs, RCRA Metals, PAHs	None	Watermain excavation North of REC-12: 720 1st Ave N – Former Auto Repair Shop with Gasoline UST and Battery Storage
B-12	20	Southeast corner of 1st Ave N & 7th St N	Up to 2 samples TPH GRO, TPH DRO, VOCs, RCRA Metals, PAHs	Up to 1 sample TPH GRO, TPH DRO, VOCs, RCRA Metals (dissolved), PAHs	Watermain / storm sewer / sanitary sewer excavation Northwest of REC-15: 26 Roberts St N – Former Lumber Storage, Auto Repair Shop, and Gasoline UST
B-13	10	South side of 1st Ave N; approx. 145 ft east of 7th St N	Up to 2 samples TPH GRO, TPH DRO, VOCs, RCRA Metals, PAHs	None	Watermain excavation North of REC-15: 26 Roberts St N – Former Lumber Storage, Auto Repair Shop, and Gasoline UST
B-14	15	North side of 1st Ave N; approx. 65 ft west of Roberts St N	Up to 2 samples TPH GRO, TPH DRO, VOCs, RCRA Metals, PAHs	Up to 1 sample TPH GRO, TPH DRO, VOCs, RCRA Metals (dissolved), PAHs	Watermain / storm sewer excavation South of REC-14: 655 1st Ave N – Former 10,000- and 30,000-Gallon Heating Oil USTs
B-15	20	Southwest corner of 1st Ave N & Roberts St N	Up to 2 samples TPH GRO, TPH DRO, VOCs, RCRA Metals, PAHs	None	Watermain / storm sewer / sanitary sewer excavation East of REC-15: 26 Roberts St N – Former Lumber Storage, Auto Repair Shop, and Gasoline UST
B-16	15	South side of 1st Ave N; approx. 50 ft east of Roberts St N	Up to 2 samples TPH GRO, TPH DRO, VOCs, RCRA Metals, PAHs	Up to 1 sample TPH GRO, TPH DRO, VOCs, RCRA Metals (dissolved), PAHs	Watermain / storm sewer excavation North of REC-18: 630 1st Ave N – Former Candy Factory with Two Tanks, Machine Shop, Printing Business, Fuel Sales Business, and Drycleaner
B-17	15	North side of 1st Ave N; approx. 150 ft east of Roberts St N	Up to 2 samples TPH GRO, TPH DRO, VOCs, RCRA Metals, PAHs	None	Storm sewer excavation South of REC-16: 625 1st Ave N – Former Printing and Clothes Cleaner Businesses South REC-17: 621 1st Ave N – Former Printing Businesses
B-18	15	Southwest corner of 1st Ave N & Broadway N	Up to 2 samples TPH GRO, TPH DRO, VOCs, RCRA Metals, PAHs	None	Watermain / storm sewer excavation North of REC-18: 630 1st Ave N – Former Candy Factory with Two Tanks, Machine Shop, Printing Business, Fuel Sales Business, and Drycleaner Northwest of REC-19: 66 Broadway N – Former Cleaning/Shoe Shining Parlor
B-19	20	South side of 1st Ave N; approx. 140 ft east of Broadway N	Up to 2 samples TPH GRO, TPH DRO, VOCs, RCRA Metals, PAHs	Up to 1 sample TPH GRO, TPH DRO, VOCs, RCRA Metals (dissolved), PAHs	Watermain / storm sewer excavation North of REC-21: 514 1st Ave N – Former Drycleaner
B-20	20	South side of 1st Ave N; approx. 50 ft west of 5th St N	Up to 2 samples TPH GRO, TPH DRO, VOCs, RCRA Metals, PAHs	None	Watermain / storm sewer excavation North of REC-23: 502 1st Ave N – Former Blacksmith, Laundry Business, and Auto Repair Shop
B-21	20	Northwest corner of 1st Ave N & 5th St N	Up to 2 samples TPH GRO, TPH DRO, VOCs, RCRA Metals, PAHs	None	Storm sewer excavation South of REC-22: 500 2nd Ave N – Former Laundry and Drycleaning Businesses, Blacksmith and Wagon Shop, Paint Shop, Railroad Spur, and Auto Repair Shop
B-22	20	East side of 5th St N; approx. 25 ft south of 1st Ave N	Up to 2 samples TPH GRO, TPH DRO, VOCs, RCRA Metals, PAHs	Up to 1 sample TPH GRO, TPH DRO, VOCs, RCRA Metals (dissolved), PAHs	Watermain / storm sewer excavation West of REC-26: 402 1st Ave N – Former Carriage Repair/Painting Shops, Blacksmith, Publisher/Printer, Auto Repair Shop, Filling Stations, and Drycleaner
B-23	20	North side of 1st Ave N; approx. 50 ft east of 5th St N	Up to 2 samples TPH GRO, TPH DRO, VOCs, RCRA Metals, PAHs	None	Storm sewer excavation South of REC-24: 101 5th St N – Current Printer/Publisher; Former Blacksmiths, Machine Shops, Auto Repair and Paint Shops, Drycleaner, and Battery Storage
B-24	10	South side of 1st Ave N; approx. 140 ft west of 4th St N	Up to 2 samples TPH GRO, TPH DRO, VOCs, RCRA Metals, PAHs	Up to 1 sample TPH GRO, TPH DRO, VOCs, RCRA Metals (dissolved), PAHs	Water main excavation North of REC-26: 402 1st Ave N – Former Carriage Repair/Painting Shops, Blacksmith, Publisher/Printer, Auto Repair Shop, Filling Stations, and Drycleaner
B-25	20	North side of 1st Ave N; approx. 60 ft west of 4th St N	Up to 2 samples TPH GRO, TPH DRO, VOCs, RCRA Metals, PAHs	None	Watermain / storm sewer excavation South of REC-25: 409 1st Ave N – Former Lumber Yard and Blacksmith/Wagon, Battery Service, and Auto Repair Shops
B-26	20	East side of 4th St N; approx. 20 ft south of 1st Ave N	Up to 2 samples TPH GRO, TPH DRO, VOCs, RCRA Metals, PAHs	Up to 1 sample TPH GRO, TPH DRO, VOCs, RCRA Metals (dissolved), PAHs	Storm sewer excavation West of REC-28: 69 4th St N – Former Auto/Equipment Repair Shop and Drycleaner
B-27	20	North side of 1st Ave N; approx. 40 ft east of 4th St N	Up to 2 samples TPH GRO, TPH DRO, VOCs, RCRA Metals, PAHs	Up to 1 sample TPH GRO, TPH DRO, VOCs, RCRA Metals (dissolved), PAHs	Watermain / storm sewer excavation South of REC-27: 102 3rd St N – Former Carriage Workshop, Blacksmith, Auto Repair Shop, and Filling Station
B-28	10	South side of 1st Ave N; approx. 90 ft east of 4th St N	Up to 2 samples TPH GRO, TPH DRO, VOCs, RCRA Metals, PAHs	None	Watermain excavation North of REC-28: 69 4th St N – Former Auto/Equipment Repair Shop and Drycleaner
B-29	10	South side of 1st Ave N; approx. 110 ft west of 3rd St N	Up to 2 samples TPH GRO, TPH DRO, VOCs, RCRA Metals, PAHs	Up to 1 sample TPH GRO, TPH DRO, VOCs, RCRA Metals (dissolved), PAHs	Watermain excavation North of REC-29: 308 1st Ave N – Current Auto Repair Shop and Former Filling Station

Acronyms
TPH = Total Petroleum Hydrocarbons
GRO = Gasoline Range Organics
DRO = Diesel Range Organics
VOCs = Volatile Organic Compounds
PAHs = Polycyclic Aromatic Hydrocarbons
RCRA = Resource Conservation and Recovery Act
REC = Recognized Environmental Condition

Notes
1. Boring locations may be adjusted in the field based on utility conflicts, overhead impediments and other access considerations.
2. Up to two soil samples will be submitted from at least one of the following: interval exhibiting the maximum soil headspace reading, obvious fill material, groundwater interface, or other visual or olfactory indications of contamination (if present). In the absence of obvious fill, contamination, or groundwater, one soil sample will be collected from the anticipated depth of future reconstruction.
3. Groundwater is anticipated to be encountered at depths between 6 and 14 feet below grade. Samples will only be collected if groundwater is encountered during the drilling.

Total proposed vertical drilling (ft): 510

REPORT OF ACTION

PUBLIC WORKS PROJECTS EVALUATION COMMITTEE

9

Improvement District No. BR-26-G0

Type: Amendment #2

Location: 17th Ave S, 25th St – Univ Dr

Date of Hearing: 11/16/2026

Routing	Date
City Commission	11/23/2026
PWPEC File	X
Project File	Rob Hasey

The Committee reviewed the accompanying correspondence from Storm Sewer Utility Engineer, Rob Hasey, regarding Amendment #2 in the amount of $4,800.00 for additional work.

Staff is recommending approval of Amendment #2 in the amount of $4,800.00, bringing the total contract amount to $706,611.00.

On a motion by Susan Thompson, seconded by Nicole Crutchfield, the Committee voted to recommend approval of Amendment #2 to Moore Engineering.

RECOMMENDED MOTION

Concur with the recommendation of PWPEC and approve Amendment #2 in the amount of $4,800.00, bringing the total contract amount to $706,611.00, to Moore Engineering.

PROJECT FINANCING INFORMATION:

Recommended source of funding for project: Utility, Sales Tax & Special Assessments

	Yes	No
Developer meets City policy for payment of delinquent specials	N/A	
Agreement for payment of specials required of developer	N/A	
Letter of Credit required (per policy approved 5-28-13)	N/A	

COMMITTEE

	Present	Yes	No	Unanimous
				☑
Josh Boschee, Mayor	☑	☑	☐	
Nicole Crutchfield, Director of Planning	☑	☑	☐	
Gary Lorenz, Fire Chief	☑	☑	☐	
Michael Redlinger, City Administrator	☑	☑	☐	
Ben Dow, Director of Operations	☑	☑	☐	
Tom Knakmuhs, City Engineer	☑	☑	☐	
Susan Thompson, Finance Director	☑	☑	☐	

ATTEST:

Tom Knakmuhs, P.E.
City Engineer

C: Kristi Olson

THE CITY OF Fargo FAR MORE

Engineering Department
225 4th Street North
Fargo, ND 58102
Phone: 701.241.1545 Fax: 701.241.8101
Email feng@FargoND.gov
www.FargoND.gov

Memorandum

To: Members of PWPEC

From: Rob Hasey, PE Storm Sewer Utility Engineer

Date: November 16, 2026

Re: Improvement District No. BR-26-G0 – 17th Avenue South Reconstruction Project Contract Amendment #2

Background:

Improvement District No. BR-26-G0 is the Consultant design contract for the 17th Avenue South reconstruction project from 25th Street South to University Drive South.

Moore Engineering was hired in 2024 to complete the overall project design, prepare the NEPA documentation for the project and complete the construction documents for bidding. The original contract amount was $691,141.00. Contract Amendment #1 (for pedestrian & traffic counts and additional survey needed for design) that was previously approved totaled $10,670.00 bringing the current contract amount to $701,811.00.

During project design for 17th Avenue South Moore Engineering was tasked with additional design challenges such as:

- Designing the connection & revising the grading and roadway/driveway connection for the BLOC parking lot (located at 1629 University Drive South)
- Storm sewer modeling to determine the appropriate width of spread for storm sewer design and updating the storm sewer technical memorandum
- Completing the necessary NDDEQ SRF forms for bidding

The extra work described above totals $4,800.00. Adding this amount to the current contract value will bring the adjusted contract amount to $706,611.00.

Recommended Motion:

Approve Contract Amendment #2 in the amount of $4,800.00 to Moore Engineering.

Funding for the project will consist of Federal Surface Transportation Block Grant and Carbon Reduction Program Funds from the NDDOT, Infrastructure Sales Tax, Street Light Utility Funds, Storm Sewer Utility Funds, Waste Water Utility Funds, Water Utility Funds and Special Assessments.

Attachment

moore engineering, inc.
a Vistal company

Amendment No. 2 to Agreement dated March 7th, 2024

Project Name: 17th Ave S Reconstruction (University Dr. to 25th St.)

Moore Project No.: 23893

Owner: City of Fargo, ND

Engineer: Moore Engineering, Inc.

Engineer is submitting this amendment to provide additional services on referenced project.

Scope of Services

Engineer provided the following additional services:

- **320: Final Design Plans and Bid Documents**
    1. Redesign of BLOC Parking Lot Connection
        a. BACKGROUND: The current design for the adjacent BLOC private site parking lot created grading conflicts with the street, driveway, and sidewalk for 17th Ave S. Using the 17th Ave S roadway design, Moore coordinated with Developer's consultant to revise the driveway and sidewalk grading to work both before and after the 17th Ave S reconstruction. This included a coordination meeting with Lowry Engineering and City of Fargo engineering staff, development of multiple grading options for Developer and City Staff review and approval, and revisions to the 17th Ave S design plans.
    2. Spread Evaluation
        a. BACKGROUND: The design team evaluated stormwater spread in the 17th Ave S curb and gutter against the NDDOT Design Manual limit of half the driving lane. Extremely flat longitudinal and transverse grades at the intersections, combined with the narrow roadway cross section, required significant iteration and consideration of relaxing the requirements. The effort also included coordination with NDDOT and City staff and extensive hydraulic modeling.
    3. NDDEQ SRF Requirements
        a. BACKGROUND: The City of Fargo is using State Revolving Funds (SRF) administered by the ND Department of Environmental Quality, requiring additional submittals and coordination with NDDEQ and NDDOT. These requirements included submitting a CWSRF Cost and Effectiveness Certification; electronically uploading, printing, and mailing a paper copy of the CatEx; adding a Special Provision to the Table of Contents; and reassembling the plans.

Fee

Owner shall pay Engineer for services rendered under this amendment as follows:

Milestone	Billing Type	Estimated Fee
320: Final Design Plans and Bid Documents	Time & Materials	$4,800.00
AMENDMENT COMPENSATION		**$4,800.00**

Agreement Fee Summary

Original agreement amount: $691,141.00
Net change for prior amendments: $10,670.00
This amendment amount: $4,800.00
Adjusted Agreement amount: $706,611.00

Basis of Amendment

In preparation of this amendment, Moore makes the following assumptions in addition to the basis provided in the Agreement:

- None

Standard Terms and Conditions

Our services under this amendment will be provided in accordance with same terms and conditions attached to the original Agreement, or as modified as follows: **None**

Acceptance

By the signatures of their authorized representatives below, the parties affirm the terms of this Amendment and agree to be bound accordingly.

Moore Engineering Inc.		**City of Fargo**	
By:	Brandon Oye	By:	
Print Name:	Brandon Oye, PE	Print Name:	
Title:	Director Operational Execution	Title:	
Date Signed:	11/06/2026	Date Signed:	

REPORT OF ACTION

PUBLIC WORKS PROJECTS EVALUATION COMMITTEE

10

Improvement District No. BN-25-A0

Type: Amendment #7

Location: 64th Ave S & I-29

Date of Hearing: 11/16/2026

Routing	Date
City Commission	11/23/2026
PWPEC File	X
Project File	Eric Hodgson

The Committee reviewed the accompanying correspondence from Project Manager, Eric Hodgson, regarding Amendment #7 in the amount of -$83,346.07.

Staff is recommending approval of Amendment #7 in the amount of -$83,346.07, bringing the total contract amount to $1,398,868.18 to Bolton & Menk.

On a motion by Susan Thompson, seconded by Nicole Crutchfield, the Committee voted to recommend approval of Amendment #7 to Bolton & Menk.

RECOMMENDED MOTION

Concur with the recommendation of PWPEC and approve Amendment #7 in the amount of -$83,346.07, bringing the total contract amount to $1,398,868.18, to Bolton & Menk.

PROJECT FINANCING INFORMATION:

Recommended source of funding for project: Sales Tax & Special Assessments

	Yes	No
Developer meets City policy for payment of delinquent specials	N/A	
Agreement for payment of specials required of developer	N/A	
Letter of Credit required (per policy approved 5-28-13)	N/A	

COMMITTEE	Present	Yes	No	Unanimous
				☑
Josh Boschee, Mayor	☑	☑	☐	
Nicole Crutchfield, Director of Planning	☑	☑	☐	
Gary Lorenz, Fire Chief	☑	☑	☐	
Michael Redlinger, City Administrator	☑	☑	☐	
Ben Dow, Director of Operations	☑	☑	☐	
Tom Knakmuhs, City Engineer	☑	☑	☐	
Susan Thompson, Finance Director	☑	☑	☐	

ATTEST:

Tom Knakmuhs, P.E.
City Engineer

C: Kristi Olson

CITY OF Fargo FAR MORE

Engineering Department
225 4th Street North
Fargo, ND 58102
Phone: 701.241.1545 | Fax: 701.241.8101
Email feng@FargoND.gov
www.FargoND.gov

Memorandum

To: Members of PWPEC

From: Eric Hodgson, Civil Engineer II

Date: November 16, 2026

Re: Improvement District No. BN-25-A0 - Removal of Amendments #4 & #5, and approval of Amendment #7 - 64th Avenue South & I29 Interchange

---

Background:

The City of Fargo procured federal funding in January 2020, for the 2025 construction of the 64th Avenue South & I29 Interchange. Bolton & Menk, Inc. was selected in January 2023 to perform the design engineering work for the project (No. BN-25-A).

In April 2023, the NDDOT revoked the 2025 federal funding due to surging construction costs in the state; later on, new federal funding was issued for the 2028 construction. On May 11, 2026 Amendments #4 & #5 were approved at City Commission. These amendments would have had the Consultant develop a separate set of plans to perform an earthwork project prior to 2028, while also having the Consultant perform construction administration for the City. This was in an effort to reduce the overall cost of the project and reduce the construction timeline. Since then, the NDDOT has informed the City that we are not able to perform an earlier project connected to the interchange work, therefore we are eliminating any remaining funds from the previously approved Amendments #4 and #5 from Bolton & Menk's contract. Additionally, we are recommending approval of Amendment #7, which addresses additional work needed to scope and timeline increases.

- **Amendment 4 (Deduction)**: Cost associated with splitting up the original plans and creating an additional plan set. The original cost of the Amendment is $184,724.00. The Consultant had already spent $39,044.34 prior to this stopping of this work, therefore a net reduction of $145,679.66 will be applied to the Consultant's contract.

- **Amendment 5 (Deduction)**: Cost associated with having Bolton and Menk perform the Construction inspection for this earlier project. This will be a reduction of $198,563.00 to the Consultant's contract.

- **Amendment 7 (Increase)**: Cost associated with scope revisions, additional requested work, additional coordination with federal entities, and increasing the timeline and associated impacts. This will be an increase of $260,896.59 to the Consultant's contract.

  This is net decrease to the contract of: (- $145,679.66) + (- $198,563) + (+$260,896.59) = **- $83,346.07**

Recommended Motion:

Approve removing the remaining scope and fee from Amendments #4 & #5 and approving adding Amendment #7 in the amount of $260,896.59 for Improvement District No. BN-25-A0.

EBH/klb

Attachments:

- Amendment #7 scope and fee.
- Previously approved Amendment #4 & #5 (for reference)

AMENDMENT NO. 7
64th Avenue South & I29 Interchange

This Amendment No. 7 is entered into by and between the City of Fargo and Bolton & Menk, Inc., in order to amend the contract dated February 3rd, 2023, thereto as follows:

1. Exhibit A: Scope of Services, pages 6 to 8, is amended to include additional labor for additional work performed that was not scoped, a 12-month schedule extension, a new task for engineer of record services, and removal of Amendments # 4 and # 5 from the contract.

Task	Description	Fee Before Amendment	Amendment # 7	Fee After Amendment
1	Project Administration	$126,284.50	$45,492.00	$171,776.50
2	Preliminary Engineering Interchange Alternatives	$162,105.00	$46,779.93	$208,884.93
3	Interstate System Access Change Request (ISACR)	$84,322.00	$44,513.28	$128,835.28
4	Preliminary Survey	$50,404.25	-$9,872.00	$40,532.25
5	Environmental Document (Documented CATEX)	$75,891.00	$12,991.32	$88,882.32
6	Geotechnical Investigation	$21,749.00	$0.00	$21,749.00
7	All Meetings	$122,234.50	$13,512.96	$135,747.46
8	Final Design and Plan Preparation	$612,769.00	-$67,511.76	$545,257.24
9A	Construction Administration (Hourly NTE)	$198,563.00	-$198,563.00	$0.00
9B	Traffic Growth Analysis	$27,892.00	$0.00	$27,892.00
10	Engineer of Record	$0.00	$29,311.20	$29,311.20
	Total	$1,482,214.25	-$83,346.07	$1,398,868.18

All other terms and conditions of the original contract dated February 3rd, 2023 not expressly amended herein remain in full force and effect.

City of Fargo

By: _____

Name: _____

Title: _____

Date: _____

Attested By: _____

BOLTON & MENK, INC.

By: _____

Name: Mike Bittner, PE PTOE

Title: Principal Engineer

Date: 11/2/2026

Witnessed By: _____

BOLTON & MENK
Real People. Real Solutions.

3168 41st Street South
Suite 2
Fargo, ND 58104

Ph: (701) 566-5339
Fax: (701) 566-5348
Bolton-Menk.com

Scope of Services: Amendment # 7
Project BN-25-A0: 64th Avenue South & I-29 Interchange
PCN 24477, IM-8-029(219)058
October 29, 2026

Summary:
The 64th Avenue interchange project has evolved over time. The biggest drivers of change have been funding availability, which has elongated the overall schedule; increased federal oversight to secure approval of funding and concepts; increased coordination with neighborhoods; and, finally, an enhanced overall design to achieve better safety and efficiency for local and regional drivers. The extra coordination efforts have proved highly valuable throughout the process. **The extra attention to potential solutions, compared with the minimalistic solutions originally proposed, has yielded $5.81M in additional federal funding to support the project.** The current design, however, includes the following parameters that were not anticipated nearly 4-years ago when the original consultant contract was developed: a larger bridge, more design-intensive intersection controls (roundabouts), and two additional loop ramps. This amendment aims to adjust the consultant budget to complete the expanded design, account for additional coordination with oversight agencies along the way and reflect the extended schedule.

Time	Construction Cost (Est.)	Consultant Fee % / $	Typical Consultant Fee %*	Federal & State Investment
Beginning of Project (Jan. 2023)	$18.25M	4.75% / $866,076	10%-15%	$18.25M
Current Status of Project (Oct. 2026)	$28.36M	4.93% / $1,398,868	10%-15%	$24.06M

*Based on similar interchange projects statewide.

Despite the increase in project scope and complexity, the overall design fee (including the costs in this amendment request), remains at less than 5% of the $28.36 million construction cost, comparable to the percentage anticipated during initial project scoping. **Now that the final concept is fully understood, it is anticipated that this will be the final amendment for this project.**

Amendment Tasks and Details:
The amendment addresses three principal needs: compensation for additional services caused by project changes and agency requests; a 12-month extension from fall 2026 to fall 2027, with bidding planned for November 2027; and post-advertisement Engineer of Record support through November 2029.

Task 1: Project Administration and Task 7: Additional Meetings
The project schedule has been extended approximately 12 months from fall 2026 to fall 2027. The schedule extension requires continued project coordination through final plan development and bidding. Task includes monthly project review committee meetings for an additional 12-months.

BOLTON & MENK
Real People. Real Solutions.

3168 41st Street South
Suite 2
Fargo, ND 58104

Ph: (701) 566-5339
Fax: (701) 566-5348
Bolton-Menk.com

Task 2: Preliminary Engineering Interchange Alternatives and Task 8: Final Design and Plan Preparation
Task includes additional time spent by project staff preparing interchange design modifications, cost estimates, and other requested items that were not originally scoped or added as an amendment. The task was critical in securing additional federal funding. The current design includes the following parameters that were not anticipated nearly 4-years ago when the original consultant contract was developed: a larger bridge, more design-intensive intersection controls (roundabouts), and two additional loop ramps.

Task 3: Intestate System Access Change Request (ISACR) and Task 5: Environmental Document
Task includes additional time spent by project staff revising the report. The additional effort was necessary to obtain FHWA concurrence and maintain progress toward approval of the new interstate access, a critical milestone for advancing the interchange project. Task also includes Task includes additional time spent by project staff revising text in the documented categorical exclusion, updating appendices, and coordinating with NDDOT ETS staff. The additional effort was necessary to obtain environmental approval from NDDOT and FHWA.

Task 10: Engineer of Record Services
Task includes answering bidder questions and preparing addendums before bids are opened, answering contractor questions, preparing change orders, and reviewing & approving shop drawings after a contractor is selected. The task is necessary to provide professional engineering support between November 2027 and November 2029 and ensures the project is built in accordance with the approved design.

Omitted Amendment # 4 and # 5 – This amendment also removes the previously agreed upon amendment # 4 for the design of a separate plan set for embankment surcharge placement. This surcharge would have been placed a year in advance of the other improvements to consolidate earth fill material needed for widening of 64th Avenue and the resulting interstate loops and ramps. After some internal deliberation, NDDOT did not believe this effort was feasible within the confines of the current environmental document and thus this effort was stopped. This affected tasks 1, 2, 4, and 8. This amendment also removes the previously agreed upon amendment # 5 for construction observation services related to the construction of the embankment surcharge placement. Since the design effort was stopped so did the construction need. This affected task 9A.

Original Negotiated Amount (Contract + Added Tasks)	$866,076.00
Previous Amendments	$616,138.25
Omitted Amendments	-$344,242.66
Current Amendment	$260,896.59
Updated Subtotal	$1,398,868.18

Detailed Cost Estimate

Client: City of Fargo
Project: BN-25-A0 (I-29 & 64th Ave S Ramps) - Amendment # 7

Bolton & Menk, Inc.

Task No.	Work Task Description	Principal in Charge	Project Manager	Traffic Engineer	Structural Engineer	Hydraulics Engineer	Design Engineer	Design Engineer	Design Engineer	Public Inv. Specialist	Intern	Total Hours	Total Cost
1.0	Project Administration & Schedule Extension	0	240	0	0	0	0	0	0	0	0	240	$45,492.00
2.0	Preliminary Engineering Interchange Alternatives	0	0	0	0	0	38	100	80	0	80	298	$46,779.93
3.0	Interstate System Access Change Request (ISACR)	16	0	200	0	0	0	0	0	0	0	216	$44,513.28
4.0	Preliminary Survey	0	0	0	0	0	0	0	0	0	0	0	-$9,872.00
5.0	Environmental Document (Documented CATEX)	0	20	0	0	0	0	40	0	8	0	68	$12,991.32
6.0	Geotechnical Investigation	0	0	0	0	0	0	0	0	0	0	0	$0.00
7.0	All Meetings	12	12	0	12	12	0	0	12	0	0	60	$13,512.96
8.0	Final Design and Plan Preparation	0	40	0	40	40	60	60	60	0	0	300	-$67,511.76
9A	Construction Administration (Hourly NTE)	0	0	0	0	0	0	0	0	0	0	0	-$198,563.00
9B	Traffic Growth Analysis	0	0	0	0	0	0	0	0	0	0	0	$0.00
10.0	Engineer of Record	0	60	0	24	24	0	0	24	0	0	132	$29,311.20
	Total Hours	28	372	200	76	76	98	200	176	8	80	1314	
	Average Hourly Rate (2026, 2027, 2028)	**$246.33**	**$227.70**	**$202.86**	**$252.54**	**$217.35**	**$166.64**	**$171.81**	**$182.16**	**$195.62**	**$108.68**		
	Subtotal	$6,897	$84,704	$40,572	$19,193	$16,519	$16,330	$34,362	$32,060	$1,565	$8,694		
	Total Fee												**-$83,346.07**

Amendment # 7 Cost Form

Improvement District No.: BN-25-A0

Type: Additional work performed, 12-month schedule extension, new task for engineer of record, elimination of Amendments # 4 & # 5.

Location: 64th Avenue S at I-29

Task No.	Work Task Description	Fixed Fee Lump Sum
1	Project Administration	$45,492.00
2	Preliminary Engineering Interchange Alternatives	$46,779.93
3	Interstate System Access Change Request (ISACR)	$44,513.28
4	Preliminary Survey	-$9,872.00
5	Environmental Document (Documented CATEX)	$12,991.32
6	Geotechnical Investigation	$0.00
7	All Meetings	$13,512.96
8	Final Design and Plan Preparation	-$67,511.76
9A	Construction Administration (Hourly NTE)	-$198,563.00
9B	Growth Area Analysis	$0.00
10	Engineer of Record	$29,311.20
	Total Not to Exceed - Amendment # 7	**-$83,346.07**

REPORT OF ACTION

PUBLIC WORKS PROJECTS EVALUATION COMMITTEE

(9)

Improvement District No. BN-25-A0

Type: Amendments #4 & #5

Location: 64th Ave S & I-29

Date of Hearing: 5/4/2026

APPROVED BY THE BOARD OF CITY COMMISSIONERS 5/11/26

Routing	Date
City Commission	5/11/2026
PWPEC File	X
Project File	Eric Hodgson

The Committee reviewed the accompanying correspondence from Project Manager, Eric Hodgson, regarding Amendments #4 & #5 in the amount of $383,287.00 for additional work.

Staff is recommending approval of Amendments #4 & #5 in the amount of $383,287.00, bringing the total contract amount to $1,454,322.25 to Bolton & Menk.

On a motion by Brenda Derrig, seconded by Nicole Crutchfield, the Committee voted to recommend approval of Amendments #4 & #5 to Bolton & Menk.

RECOMMENDED MOTION

Concur with the recommendation of PWPEC and approve Amendments #4 & #5 in the amount of $383,287.00, bringing the total contract amount to $1,454,322.25 to Bolton & Menk.

PROJECT FINANCING INFORMATION:

Recommended source of funding for project: Sales Tax & Special Assessments

	Yes	No
Developer meets City policy for payment of delinquent specials	N/A	
Agreement for payment of specials required of developer	N/A	
Letter of Credit required (per policy approved 5-28-13)	N/A	

COMMITTEE	Present	Yes	No	Unanimous
				☑
Tim Mahoney, Mayor	☐	☐	☐	
Nicole Crutchfield, Director of Planning	☑	☑	☐	
Gary Lorenz, Fire Chief	☑	☑	☐	
Brenda Derrig, Assistant City Administrator	☑	☑	☐	
Ben Dow, Director of Operations	☑	☑	☐	
Tom Knakmuhs, City Engineer	☑	☑	☐	
Susan Thompson, Finance Director	☑	☑	☐	

ATTEST:

Tom Knakmuhs, P.E.
City Engineer

C: Kristi Olson

THE CITY OF Fargo FAR MORE

Engineering Department
225 4th Street North
Fargo, ND 58102
Phone: 701.241.1545 | Fax: 701.241.8101
Email feng@FargoND.gov
www.FargoND.gov

Memorandum

To: Members of PWPEC

From: Eric Hodgson, Civil Engineer II

Date: May 4, 2026

Re: Improvement District No. BN-25-A0 – Amendment's #4 & #5
64th Avenue South & I29 Interchange

Background:

The City of Fargo procured federal funding in January 2020, for the 2025 construction of the 64th Avenue South & I29 Interchange. Bolton & Menk, Inc. was selected in January 2023 to perform the design engineering work for the project (No. BN-25-A).

In April 2023, the NDDOT revoked the 2025 federal funding due to surging construction costs in the state. Later, new federal funding was issued for 2028 construction. Due to these developments, it is our belief that it'll be cheaper overall for us to perform a dirt work project prior to 2028. Performing any work now will be cheaper than performing the same work later due to inflation. Additionally, an earlier project will allow time for the earthwork settlement needed when constructing a bridge, which will allow us to not have to use lightweight fill in the embankment construction, which can also be costly. This will also give us a better opportunity to complete the 2028 project in one construction season versus needing two.

- **Amendment 4**: Addresses the additional cost associated with splitting up the plans and creating an additional plan set. It also includes out of scope work already performed to evaluate the viability of performing an earlier project.
- **Amendment 5**: Addresses the additional cost associated with having Bolton and Menk perform the construction inspection for this earlier project. This amendment also includes the cost for Braun Intertec to perform testing and inspection work as well.

Included in this packet is the additional scope of work for Amendment #4 in the amount of $184,724 and Amendment #5 in the amount of $198,563 for the referenced project in the total amount of $383,287.

Recommended Motion:

Approve Amendment #4 and #5 in the total amount of $383,287.00 for BN-25-A0.

EBH/klb
Attachments:
- Amendment #4
- Amendment #5

BOLTON & MENK

Real People. Real Solutions.

3168 41st Street South
Suite 2
Fargo, ND 58104

Ph: (701) 566-5339
Fax: (701) 566-5348
Bolton-Menk.com

Scope of Services: Amendment # 4

Project BN-25-A0: 64th Avenue South & I-29 Interchange

PCN 24477, IM-8-029(219)058

March 27, 2026

Amendment # 4 is needed to account for additional labor necessary to develop a standalone design and plan set with expedited timelines for completion to bid and begin construction in 2026. This design and plan set will focus on placing embankment widening to act as a surcharge for consolidating earthen material between the Fall of 2026 and spring of 2028. The placement of this material in advance of permanent roadway and bridge widening improvements is a benefit to the overall project by utilizing available & low-cost material from excavation of the nearby Southwest Regional Pond and allowing settlement of earthen material to occur over 20+ months instead of a few weeks.

Anticipated design project between 4/14/26 and 6/30/26 (11 weeks) for a bid date by 8/31/26 so that earthen embankment material can be placed and compacted between September and October 2026.

The Bolton & Menk team will be responsible for completing the following tasks:

Task 1: Project Administration

Task includes day-to-day project management and administration for developing a standalone plan set with expedited timelines. Additional time required to update normal project meeting agendas, minutes, progress reports, and invoicing with standalone plan set information.

Task 4: Surveying & Mapping

Task includes additional topographic survey and drone UAV LiDAR to collect the new existing surface after material has been placed and sat for 12 to 15 months. At the very latest, data will need to be collected by October 2027 so it can be included with final plans in December 2027 for a February 2028 bid opening and construction starting in May 2028. Task includes survey staff utilizing GPS equipment for ground truthing to supplement a drone LiDAR flight collecting the bulk of data. The volume of material placed and compacted will be calculated by our survey of the interchange and validated/confirmed by the contractors own survey of material excavated from the SW Regional Pond. A plan note will be written to describe this contractor performed task.

Additionally, another GPS & LiDAR drone survey will need to be conducted in the Spring of 2028 immediately before construction starts to determine if additional material consolidation occurred which would effect the volume of final grading earthwork needed.

Task 8: Final Design and Plan Preparation

Task includes additional corridor modeling and earthwork calculations to advance two design alternatives to the preliminary design stage to develop plan & profile sheets, cross sections, quantities, and cost estimates such that the City can make informed decisions. Task includes final design for plan sections 1, 2, 4, 6, 8, 10, 11, 20, 30, 40, 51, 55/60, 75, 76, 77, 80, 100, 175, and 200. Title sheet, table of contents, scope of work, notes, summary of estimated quantities, basis of estimate, earthwork, details, typical sections, removals, allowable pipe list, drainage /

BOLTON & MENK

Real People. Real Solutions.

3168 41st Street South
Suite 2
Fargo, ND 58104

Ph: (701) 566-5339
Fax: (701) 566-5348
Bolton-Menk.com

plan & profile, wetland impacts & mitigation, temporary and permanent erosion control, fencing layout, work zone traffic control, soil boring logs, and cross sections. Task includes utility coordination, engineering, and conflict plans. Task includes preparation of an engineers estimate and the necessary special provisions. Task includes formal QAQC at the 90% and 100% plan deliverable stages and addressing plan review comments from NDDOT and City of Fargo.

Delivery of Data, Format, and Standards: All data will become property of the City of Fargo and NDDOT upon completion. All data will be generated in the following formats and standards were applicable:

- Microsoft Word, Excel, Teams, and Project
- Bentley ORD 2024
- NDDOT CADD Manual
- NDDOT Consultant Survey Manual Chapter 19
- NDDOT CADD Editing Standards Manual Chapter 21
- NDDOT Data Collection Codes and Procedures
- NDDOT Design Manual and Plan Preparation Guide Website
- NDDOT Right of Way Manual
- NDDOT Standard Specifications for Road and Bridge Construction
- City of Fargo Standard Specifications for water and sanitary sewer improvements
- Adobe Acrobat Reader Pro

Schedule:

4/6/26 – City of Fargo PWPEC Meeting

4/13/26 – City of Fargo Commission Meeting

4/14/26 – Notice to Proceed

5/15/26 – 50% Plans for City & DOT Review

6/15/26 – 90% Plans for City & DOT Review

6/30/26 – 100% Final Plan Submittal

7/31/26 – Bid Date

August 2026 – City Approval of Bid & Contract

September & October 2026 - Construction

Detailed Cost Estimate

Task No.	Work Task Description	Project Manager	Design Engineer	Design Engineer	Survey Manager	Surveyor	Totals	Costs
	HIDE	C. Dahl	T. Schmeltz	C. Brown	S. Thomasson	C. Marum		
1.0	Project Administration							
1.1	Meeting Agendas & Minutes	7					7	$1,526.00
1.2	Bi-weekly Progress Reports & Schedule Updates	7					7	$1,526.00
1.3	Day-to-Day Project Management and Coordination	28					28	$6,104.00
4.0	Survey Data and Mapping							
4.1	Additional topographic survey for new existing surface after surcharge - Fall 2027				2	16	18	$3,544.00
4.2	Survey Processing, Surface Creation, Quantity Verification - Fall 2027		8				8	$1,392.00
4.3	Spring 2028 Pre-Construction Survey, Surface, Quantities		8		2	16	26	$4,936.00
8.0	Detail Design and Plan Preparation							
8.1	Surcharge Viability, Limits, Quantities, Cost - two alternatives	20	136	68			224	$39,176.00
8.2	Corridor Modeling and Earthwork - one alternative		180	100			280	$47,720.00
8.3	Plan Sections 1, 2, 4, 6, 8, 10, 11, 20, 30, 40, 51, 55, 60, 75, 76, 77, 80, 100, & 175 - one alternative	24	120	120			264	$45,792.00
8.4	Section 200 Cross Section sheeting & cleanup		100	40			140	$23,960.00
8.5	Utility Coordination, Engineering, Conflict Plans	8		80			88	$14,864.00
8.6	Engineers Estimate and Special Provisions	20					20	$4,360.00
8.7	QAQC & Address Client Comments	40	60	60			160	$29,000.00
	Total Hours	184	476	480	4	82	1046	
	Average Hourly Rate - 2026	$218.00	$174.00	$164.00	$212.00	$169.00		
	Subtotal	$39,212.00	$82,824.00	$78,720.00	$848.00	$13,948.00		
	Total Fee							$215,552.00

Detailed Cost Estimate

Client: City of Fargo
Project: BN-25-A0 (I-29 & 64th Ave S Ramps) - Amendment # 4

Bolton & Menk, Inc.

Task No.	Work Task Description	Project Manager	Design Engineer	Design Engineer	Survey Manager	Surveyor	Total Hours	Total Cost
	HIDE	C. Dahl	T. Schmaltz	C. Brown	S. Thomasson	C. Marum		
1.0	Project Administration	42	0	0	0	0	42	$9,156.00
4.0	Surveying and Mapping	0	16	0	4	32	52	$9,872.00
8.0	Final Design and Plan Preparation	92	460	400	0	0	952	$165,696.00
	Total Hours	134	476	400	4	32	1046	
	Average Hourly Rate - 2026	$218.00	$174.00	$164.00	$212.00	$195.00		
	Subtotal	$29,212	$82,824	$65,600	$848	$6,240		
	Total Fee							$184,724.00

Task	Description	Fee Before Amendment	Amendment # 4	Fee After Amendment
1	Project Administration	$117,128.50	$9,156.00	$126,284.50
2	Preliminary Engineering Interchange Alternatives	$162,105.00		$162,105.00
3	Interstate System Access Change Request (ISACR)	$84,322.00		$84,322.00
4	Preliminary Survey	$40,532.25	$9,872.00	$50,404.25
5	Environmental Document (Documented CATEX)	$75,891.00		$75,891.00
6	Geotechnical Investigation	$21,749.00		$21,749.00
7	All Meetings	$122,234.50		$122,234.50
8	Final Design and Plan Preparation	$447,073.00	$165,696.00	$612,769.00
	Total	$1,071,035.25	$184,724.00	$1,255,759.25

Amendment # 4 Cost Form

Improvement District No.: BN-25-A0
Type: Separate plan set for embankment placement in Fall 2026
Location: 64th Avenue S at I-29

Task No.	Work Task Description	Fixed Fee Lump Sum
1	Project Administration	$9,156.00
2	Preliminary Engineering Interchange Alternatives	$0.00
3	Interstate System Access Change Request (ISACR)	$0.00
4	Preliminary Survey	$9,872.00
5	Environmental Document (Documented CATEX)	$0.00
6	Geotechnical Investigation	$0.00
7	All Meetings	$0.00
8	Final Design and Plan Preparation	$165,696.00
	Total Not to Exceed - Amendment # 4	**$184,724.00**

AMENDMENT NO. 4
64th Avenue South & I29 Interchange

This Amendment No. 4 is entered into by and between the City of Fargo and Bolton & Menk, Inc., in order to amend the contract dated February 3rd, 2023, thereto as follows:

1. Exhibit A: Scope of Services, pages 6 to 11, is amended to include additional labor for tasks below to develop a standalone design and plan set for embankment widening to act as a surcharge for consolidating earthen material between the fall of 2026 and spring of 2028.

Task	Description	Fee Before Amendment	Amendment # 4	Fee After Amendment
1	Project Administration	$117,128.50	$9,156.00	$126,284.50
2	Preliminary Engineering Interchange Alternatives	$162,105.00		$162,105.00
3	Interstate System Access Change Request (ISACR)	$84,322.00		$84,322.00
4	Preliminary Survey	$40,532.25	$9,872.00	$50,404.25
5	Environmental Document (Documented CATEX)	$75,891.00		$75,891.00
6	Geotechnical Investigation	$21,749.00		$21,749.00
7	All Meetings	$122,234.50		$122,234.50
8	Final Design and Plan Preparation	$447,073.00	$165,696.00	$612,769.00
	Total	$1,071,035.25	$184,724.00	$1,255,759.25

All other terms and conditions of the original contract dated February 3rd, 2023 not expressly amended herein remain in full force and effect.

City of Fargo

By: Dr. Timothy J. Mahoney

Name: [signature]

Title: Mayor

Date: _____

Attested By: Angie Bear

BOLTON & MENK, INC.

By: DocuSigned by: [signature] 6991F195A47A46C...

Name: Aaron Warford

Title: Vice President

Date: 4/30/2026

Witnessed By: /s/ Chris Dahl

BOLTON & MENK

Real People. Real Solutions.

4334 18th Ave South
Suite 101
Fargo, ND 58103

Phone: (701) 566-5339
Bolton-Menk.com

Scope of Services: Amendment # 5

Project BN-25-A0: 64th Avenue South & I-29 Interchange

PCN 24477, IM-8-029(219)058

April 10, 2026

Amendment #5 is needed to account for construction observation for embankment widening of the interchange in the fall of 2026. Anticipated bid date by 7/31/26 so that earthen embankment material can be placed and compacted between September and November 2026. We've assumed one project manager (lead inspector) will be on site 5.5 days/week for 11 hour days (average, more in September, less in November due to daylight) starting September 8th, 2026 through November 14th, 2026. This totals 55 working days for the project construction and days that inspection staff will be on site.

Construction survey associated with this amendment are anticipated to be required on an intermittent basis over the estimated 10-week construction period between September and November 2026. Survey staffing and hours have been developed to align with the phased nature of embankment construction and borrow material operations. It is assumed that one survey crew will be required an average of two (2) eight-hour days per week over the estimated 10-week construction duration, with site visits coordinated to match construction sequencing and field conditions.

The Bolton & Menk team will be responsible for completing the following scope of work:

Task 9: Construction Administration

Task includes day-to-day project management and administration for a standard NDDOT construction project documented in CARS and with coordination with City of Fargo and NDDOT Fargo District.

The Project Engineer will schedule and conduct the pre-construction conference upon contractor's request, document pertinent information, and assemble documents for meetings. The Project Engineer will also distribute invitations and prepare and distribute meeting minutes. The Project Engineer, Project Manager, and Project Inspectors will study plans, specifications, and award documents in preparation for the conference and prior to start of construction.

The Project Manager shall consistently review the contractor's schedule to identify any potential conflicts or problems and keep the Project Engineer updated on project schedule through progress reports and conversations. If any unforeseen events/conditions arise during the project, the Project Manager will consult with the Project Engineer who will then discuss with the City of Fargo and NDDOT and coordinate with the contractor on the proposed solution.

Construction Observation

Task includes on-site construction observation and inspection of culvert & end section removal, fence removal, stabilized construction entrance, topsoil stripping & stockpiling, excavation for sand layer installation, embankment widening, new culverts and end sections, temporary and permanent erosion control, and fence placement. Includes observing placement of temporary traffic control devices in the form of single lane closures on 64th Ave immediately adjacent to the quadrant being worked on.

The project engineer shall review all submittals, inspection diaries, pay quantity estimates, complete EEO documents and weekly progress reports amongst other tasks on a regular basis. The project engineer shall provide oversight to all field personnel on project related items. The project engineer shall lead communications with the contractor, scheduling weekly meetings and informing the City of Fargo and NDDOT of any deviations from the schedule or other project concerns. Final records will be completed in a timely manner after final project completion and acceptance and submitted for completion by early.

The Project Manager shall provide oversight of all construction activities for the project. The Project Manager will also provide oversight and approval of all project records, progress reports, and pay quantity entries. All personnel assigned to the project will study project plans, specifications, and award documents prior to start of each construction operation. The Project Manager will conduct daily inspections of the work zone traffic control devices. The contractor will be notified immediately of any deficiencies.

The Project Manager shall be on site at all times while construction is in progress. The on-site project team will complete and enter all Daily Inspection Diaries into CARS, as well as Pay Quantity Entries (PQE). Three separate parties will enter, check, and approve PQE's. Progressive Estimates will be submitted every 1-2 weeks based on the completed work activities.

All construction inspection and management staff will adhere to the most recent version of the NDDOT Construction Records Manual for proper procedures, documentation, and instructions for the operations of CARS.

Construction Surveying

Task includes surveyors placing slope stakes for limits of excavation, staking the limits of the existing sand layer to identify starting locations for embankment placement, surveying topsoil stockpile volumes, and performing construction-phase surface topographic surveys. Task also includes repeated ground-based topographic surveys of borrow pits to determine sand quantities prior to material removal and following material removal at multiple stages during construction.

Survey services will include the following:

- Establishment and verification of project horizontal and vertical control as required to support construction staking and survey data collection.
- Construction staking for embankment widening and surcharge work, including staking of limits of excavation, grading limits, slope stakes, and identification of existing sand layer extents as shown in the approved plans.
- Construction-phase topographic data collection and development of surface models following major construction stages, including:
  - After topsoil stripping
  - After embankment placement
- Ground-based topographic surveys of borrow pits, including multiple survey events to document surface conditions before material removal and after material removal for construction-phase material quantity determination.

Note that scoped surveying services for this construction project are not duplicates of scoped surveying as a part of the embankment widening design project.

All survey data, models, and supporting documentation will be prepared and delivered in formats consistent with NDDOT and City of Fargo requirements.

Sub-Consultant Braun Intertec Material Testing
Task performed by Braun for gradation testing of sand, moisture & density tests of sand, and moisture & density tests of embankment. Preliminary quantities are 30,000 Tons of sand and 115,000 CY of borrow material placed. See separate scope and fee from Braun Intertec.

Delivery of Data, Format, and Standards: All data will become property of the City of Fargo and NDDOT upon completion. All data will be generated in the following formats and standards where applicable:

- Microsoft Word, Excel, Teams
- NDDOT Consultant Survey Manual Chapter 19
- NDDOT CADD Editing Standards Manual Chapter 21
- NDDOT Data Collection Codes and Procedures
- NDDOT Design Manual and Plan Preparation Guide Website
- NDDOT Right of Way Manual
- NDDOT Standard Specifications for Road and Bridge Construction
- City of Fargo Standard Specifications for water and sanitary sewer improvements
- Adobe Acrobat Reader Pro

Estimated Schedule:

7/31/26 – Bid Date

August 2026 – City Approval of Bid & Contract

September-November 2026 - Construction

BRAUN
INTERTEC

April 10, 2026

Proposal 10010420_001

Mr. Grant Kuper, PE
Bolton & Menk, Inc.
4334 18th Avenue South, Suite 101
Fargo, ND 58103

Re: Proposal for Construction Materials Testing Services
64th Avenue South Interchange
Embankment Construction
Fargo, North Dakota

Dear Mr. Kuper:

Braun Intertec Corporation (Braun Intertec) submits this proposal to provide construction materials testing services for the 64th Avenue South Interchange Project in Fargo, North Dakota.

Our Understanding of Project

We understand this project will include the construction of embankments for the future placement of on and off ramps for the Interstate 29 64th Avenue South interchange. The construction will consist of the placement of a sand drainage layer beneath the new embankment construction and connecting to the existing overpass embankment sand drainage layer along with embankment construction for on and off ramps and widening the existing overpass embankment. This project also includes the installation of one culvert.

Available Project Information

This proposal was prepared using the following documents and information.

- Preliminary plans prepared by Bolton & Menk, Inc., dated March 27, 2026.
- NDDOT 2025 Standard Specifications for Road and Bridge Construction.
- NDDOT 2025 Field Sampling and Testing Manual.

Braun Intertec Project Personnel

For this project, we will furnish certified technicians who will conduct the requested testing. We will also provide any equipment needed to perform tasks necessary to provide engineer's acceptance of project materials related to soils and aggregates.

Scope of Services

Qualified Braun Intertec technicians will provide the required observation and testing services under the direction of a registered professional engineer, either on a full-time or periodic basis depending on the construction schedule and when requested by Bolton & Menk's resident project engineer.

Soil Related Services

- Perform sand cone and nuclear gauge density tests on embankment and utility backfill materials.
- Perform gradation tests on aggregate materials.
- Perform laboratory standard Proctor tests on backfill and fill materials.

Project Communication, Engineering, and Reporting Services

- Project management, including scheduling of our field personnel.
- Review test reports and communicating with you and the parties you may designate, such as the project contractor(s), and other project team members, as needed.
- Engineering review as needed during construction.
- Transmit results to the project team using a web-based portal.

Basis of Scope of Work

The costs associated with the proposed scope of services were estimated using the following assumptions. If the construction schedule is modified or the contractor completes the various phases of the project at different frequencies or durations than shown in this proposal, we may need to adjust the overall cost accordingly. The scope of work and number of hours required to perform these services are as shown in the attached fee estimate. Notable assumptions in developing our estimate include:

- We assume this project will be completed in the fall of 2026.
- We assume 125 trips to complete the density testing for this project.
- We understand the project engineer of record will review and approve the contractor's quality control submittals and test results.
- You, or others you may designate, will provide us with current and approved plans and specifications for the project. Modification to these plans must also be sent to us so we can review their incorporation into the work.
- No special site specific training or gear is required to complete our scope of services.

- We will require a minimum of 24 hours' notice for scheduling inspections for a specific time. Shorter than 24 hours' notice may impact our ability to perform the requested services, and the associated impacts will be the responsibility of others.

If the work is completed at different rates than described above, this proposal should be revised.

Cost and Invoicing

We will furnish the services described herein for an estimated fee of **$42,243.00. Our estimated costs are based on industry averages for construction production. Depending on the contractor's performance, our costs may be reduced or higher than estimated.** A tabulation showing our estimated hourly and/or unit rates associated with our proposed scope of services is also attached. The actual cost of our services will be based on the actual units or hours expended to meet the requirements of the project documents. You will be billed only for services provided on a time and materials basis.

Because our services are directly controlled by the schedule and performance of others, the actual cost may vary from our estimate. It is difficult to project all of the services and the quantity of services that may be required for any project. If services are required that are not discussed above, we will provide them at the rates shown in the attached table or, if not shown, at our current Schedule of Charges. We will invoice you on a monthly basis.

General Remarks

We based the proposed fee on the scope of services described and the assumption that you will authorize our services within 30 days and that others will not delay us beyond our proposed schedule. If anything in this proposal is not consistent with your requirements, please let us know immediately.

We will provide our services under the terms of the Subconsultant Master Agreement For Professional Services dated January 8, 2025. To accept this proposal and authorize us to proceed, please sign and return it to us in its entirety.

We appreciate the opportunity to present this proposal to you. We will be happy to meet with you to discuss our proposed scope of services further and clarify the various scope components. Braun Intertec will not release any written reports until we have received a signed agreement. Ordering services from Braun Intertec constitutes acceptance of the terms of this proposal.

To have questions answered or schedule a time to meet and discuss our approach to this project further, please contact Mike Marquart at 701-353-9915 or mmarquart@braunintertec.com.

Sincerely,

Braun Intertec Corporation

Michael Marquart
Project Manager

for
Adam Nistler
Senior Project Manager, Director

for
Ezra Ballinger, PE
Principal Engineer

Attachments:
Fee Estimate

The proposal is accepted, and Braun Intertec is authorized to proceed.

_____
Authorizer's Firm

_____
Authorizer's Signature

_____
Authorizer's Name (please print or type)

_____
Authorizer's Title

_____
Date

BRAUN INTERTEC

the science you build on

Fee Estimate

10010420_001

64th Ave S Interchange, Embankment

Client:
Bolton & Menk, Inc.
Grant Kuper
Attn: Accounts Payable1960 Premier Dr
Mankato, MN 56001
(701) 540-7444

Work Site Address:
64th Ave S & Interstate 29
Fargo, North Dakota 58104

		Qty/Hours	Rate	Amount
Task 1: Construction Materials Testing				
Subtask 1.1: Soil				**$29,355.00**
Soil Compaction Testing - Nuclear		250.00	103.00	$25,750.00
Embankment	*120 Trips @ 2 Hr*	*240.00*		
Storm Sewer	*5 Trips @ 2 Hr*	*10.00*		
Soil Sample pick-up		15.00	103.00	$1,545.00
Soil Compaction Testing - Non Nuclear		20.00	103.00	$2,060.00
Subtask 1.2: Laboratory Testing				**$3,368.00**
Soil Proctor MD Relationship (Standard) ASTM D698 each		10.00	217.00	$2,170.00
Sieve Analysis with No. 200 wash (ASTM C136 and C117)		6.00	164.00	$984.00
Lightweight Particles (ASTM C123, 2.0 spicific Gravity)		1.00	107.00	$107.00
Aggregate Percent Crushed ASTM D5821 each		1.00	107.00	$107.00
Subtask 1.3: Project Management				**$9,520.00**
Project Manager		35.00	194.00	$6,790.00
Principal Engineer		10.00	273.00	$2,730.00
Task 1 Total:				**$42,243.00**
Project Total				**$42,243.00**

Detailed Cost Estimate

Task No.	Work Task Description	Project Engineer	Project Manager	Survey Manager	Survey Crew Chief	Administrative	Totals	Costs
	HDE	G. Kuper	M. Clevenger	T. Olen	C. Marum	A. Couthart		
9.1	General Oversight	40	0	5	0	1	46	$8,430.00
9.2	Project Team Coordination meetings	10	0	0	0	0	10	$1,850.00
9.3	Invoicing and Wage Compliance	4	0	0	0	10	14	$1,790.00
9.4	On-site Inspection, Quantity Recording, and Daily Diaries.	15	575	0	0	0	590	$90,175.00
9.5	CARS Paperwork and Pay Estimates	55	30	0	0	0	85	$14,735.00
9.6	Construction Staking & Topographic Survey	2	0	40	160	0	202	$38,970.00
	Total Hours	126	605	45	160	11	949	
	Average Hourly Rate - 2026	$185.00	$152.00	$185.00	$185.00	$105.00		
	Subtotal	$23,310.00	$91,960.00	$8,325.00	$29,600.00	$1,155.00		

Detailed Cost Estimate

Client: City of Fargo
Project: BN-25-A0 (I-29 & 64th Ave S Ramps) - Amendment # 5

Task No.	Work Task Description	Project Engineer	Project Manager	Survey Manager	Survey Crew Chief	Administrative	Total Hours	Total Cost
	HIDE	G. Kuper	M. Clevenger	T. Olen	C. Marum	A. Couthart		
9.0	Construction Administration	128	605	45	160	11	949	$156,320.00
	Total Hours	128	605	45	160	11	949	
	Average Hourly Rate - 2026	$185.00	$152.00	$185.00	$195.00	$105.00		
	Subtotal	$23,680	$91,960	$8,325	$31,200	$1,155		
	B&M Sub Total							$156,320.00

Task	Description	Fee Before Amendment	Amendment # 5	Fee After Amendment
1	Project Administration	$126,284.50	$0.00	$126,284.50
2	Preliminary Engineering Interchange Alternatives	$162,105.00	$0.00	$162,105.00
3	Interstate System Access Change Request (ISACR)	$84,322.00	$0.00	$84,322.00
4	Preliminary Survey	$50,404.25	$0.00	$50,404.25
5	Environmental Document (Documented CATEX)	$75,891.00	$0.00	$75,891.00
6	Geotechnical Investigation	$21,749.00	$0.00	$21,749.00
7	All Meetings	$122,234.50	$0.00	$122,234.50
8	Final Design and Plan Preparation	$612,769.00	$0.00	$612,769.00
9	Construction Administration (Hourly NTE)	$0.00	$198,563.00	$198,563.00
	Total	$1,255,759.25	$198,563.00	$1,454,322.25

Amendment # 5 Cost Form

Improvement District No.: BN-25-A0
Type: Separate plan set for embankment placement in Fall 2026
Location: 64th Avenue S at I-29

Task No.	Work Task Description	
1	Project Administration	$0.00
2	Preliminary Engineering Interchange Alternatives	$0.00
3	Interstate System Access Change Request (ISACR)	$0.00
4	Preliminary Survey	$0.00
5	Environmental Document (Documented CATEX)	$0.00
6	Geotechnical Investigation	$0.00
7	All Meetings	$0.00
8	Final Design and Plan Preparation	$0.00
9	Construction Administration (Hourly NTE)	$198,563.00
	Total Not to Exceed - Amendment # 5	**$198,563.00**

AMENDMENT NO. 5
64th Avenue South & I29 Interchange

This Amendment No. 5 is entered into by and between the City of Fargo and Bolton & Menk, Inc., in order to amend the contract dated February 3rd, 2023, thereto as follows:

1. Exhibit A: Scope of Services, pages 6 to 11, is amended to include additional labor for task # 9 below to perform construction administration for earthen embankment surcharge placement in the fall of 2026.

Task	Description	Fee Before Amendment	Amendment # 5	Fee After Amendment
1	Project Administration	$126,284.50	$0.00	$126,284.50
2	Preliminary Engineering Interchange Alternatives	$162,105.00	$0.00	$162,105.00
3	Interstate System Access Change Request (ISACR)	$84,322.00	$0.00	$84,322.00
4	Preliminary Survey	$50,404.25	$0.00	$50,404.25
5	Environmental Document (Documented CATEX)	$75,891.00	$0.00	$75,891.00
6	Geotechnical Investigation	$21,749.00	$0.00	$21,749.00
7	All Meetings	$122,234.50	$0.00	$122,234.50
8	Final Design and Plan Preparation	$612,769.00	$0.00	$612,769.00
9	Construction Administration (Hourly NTE)	$0.00	$198,563.00	$198,563.00
	Total	$1,255,759.25	$198,563.00	$1,454,322.25

All other terms and conditions of the original contract dated February 3rd, 2023 not expressly amended herein remain in full force and effect.

City of Fargo

By: Dr. Timothy J. Mahoney

Name: [signature]

Title: Mayor

Date: _____

Attested By: [signature]

BOLTON & MENK, INC.

By: DocuSigned by: [signature] 8991F195A47A46C...

Name: Aaron Warford

Title: Vice President

Date: 4/30/2026

Witnessed By: /s/ Chris Dahl

REPORT OF ACTION

PUBLIC WORKS PROJECTS EVALUATION COMMITTEE

11

Improvement District No. BR-26-C1

Type: Negative Final Balancing Change Order #2

Location: 10th Ave S; 6th – 7th St, 11th Ave S; 7th – 8th St, 12th Ave S; 6th – 7th St, 7th St S; 10th -13th Ave

Date of Hearing: 11/16/2026

Routing	Date
City Commission	11/23/2026
PWPEC File	X
Project File	Will Bayuk

The Committee reviewed the accompanying correspondence from Project Manager, Will Bayuk, regarding Negative Final Balancing Change Order #2 in the amount of -$65,330.97, which reconciles the final quantities as measured in the field.

Staff is recommending approval of Negative Final Balancing Change Order #2 in the amount of -$65,330.97, which brings the total contract amount to $2,736,311.97.

On a motion by Susan Thompson, seconded by Nicole Crutchfield, the Committee voted to recommend approval of Negative Final Balancing Change Order #2 to Dakota Underground.

RECOMMENDED MOTION

Concur with the recommendations of PWPEC and approve Negative Final Balancing Change Order #2 in the amount of -$65,330.97, bringing the total contract amount to $2,736,311.97, to Dakota Underground.

PROJECT FINANCING INFORMATION:

Recommended source of funding for project: Utility Funds, Sales Tax & Special Assessments

	Yes	No
Developer meets City policy for payment of delinquent specials	N/A	
Agreement for payment of specials required of developer	N/A	
Letter of Credit required (per policy approved 5-28-13)	N/A	

COMMITTEE	Present	Yes	No	Unanimous
				☑
Josh Boschee, Mayor	☑	☑	☐	
Nicole Crutchfield, Director of Planning	☑	☑	☐	
Gary Lorenz, Fire Chief	☑	☑	☐	
Michael Redlinger, City Administrator	☑	☑	☐	
Ben Dow, Director of Operations	☑	☑	☐	
Tom Knakmuhs, City Engineer	☑	☑	☐	
Susan Thompson, Finance Director	☑	☑	☐	

ATTEST:

Tom Knakmuhs, P.E.
City Engineer

C: Kristi Olson

CITY OF Fargo FAR MORE

Engineering Department
225 4th Street North
Fargo, ND 58102
Phone: 701.241.1545 | Fax: 701.241.8101
Email feng@FargoND.gov
www.FargoND.gov

Memorandum

To: Members of PWPEC

From: Will Bayuk, PE - Project Manager

Date: November 12, 2026

Re: Improvement District No. BR-26-C1 – Negative Final Balancing Change Order #2

Background:

Improvement District No. BR-26-C1 is for the reconstruction of 11th Avenue South from 7th Street to 8th Street, 12th Avenue South from 6th Street to 7th Street, and 7th Street South from 10th Avenue to 13th Avenue.

Dakota Underground Inc. is the Prime Contractor on this project.

Attached is Negative Final Balancing Change Order #2 in the amount of -$65,330.97. The Contractor met the requirements of the contract and it has been accepted by the City. This FBCO reconciles the estimated quantities used in the contract with the final quantities as measured in the field.

Original Contract:	$	2,785,515.83
CO #1	$	16,127.11
Neg FBCO #2:	$	-65,330.97
Total Contract:	**$**	**2,736,311.97**

Recommended Motion:

Approve Negative Final Balancing Change Order #2 in the amount of -$65,330.97 to Dakota Underground Inc. for Improvement District No. BR-26-C1.

WRB/klb
Attachment

THE CITY OF Fargo FAR MORE

CHANGE ORDER REPORT

PAVING AND UTILITY REHAB/RECONSTRUCTION

IMPROVEMENT DISTRICT NO. BR-26-C1

10TH AVENUE SOUTH FROM 6TH STREET TO 7TH STREET, 11TH AVENUE SOUTH FROM 7TH STREET TO 8TH STREET, 12TH AVENUE SOUTH FROM 6TH STREET TO 7TH STREET, AND 7TH STREET SOUTH FROM 10TH AVENUE TO 13TH AVENUE.

Final Balancing Change Order

Change Order No 2 **Change Order Date** 11/10/2026

Contractor Dakota Underground Co Inc

This change is made under the terms of or is supplemental to your present contract, if and when approved, you are ordered to perform the work in accordance with the additions, changes, or alterations hereinafter described.

EXPLANATION OF CHANGE Change Order # 2

FBCO for BR-26-C1

Section	Line No	Item Description	Unit	Orig Cont Qty	Prev C/O Qty	Prev Cont Qty	Curr C/O Qty	Tot Cont Qty	Unit Price ($)	C/O Ext Price ($)
Sanitary Sewer	1	F&I Controlled Density Fill	CY	37		37	-18.4	18.6	$300.00	-$5,520.00
	3	Remove Manhole	EA	5		5	-1	4	$2,000.00	-$2,000.00
	4	F&I 1-1/4" Trench Found Rock 4" thru 12" Dia	LF	1121.6		1121.6	-1121.6	0	$0.01	-$11.22
	5	Clean Pipe All Sizes All Types	LF	1121.6		1121.6	-1121.6	0	$3.00	-$3,364.80
	7	Bore Pipe SDR 26 - 6" Dia PVC	LF	995.41		995.41	-974.91	20.5	$0.01	-$9.75

Section	Line No	Item Description	Unit	Orig Cont Qty	Prev C/O Qty	Prev Cont Qty	Curr C/O Qty	Tot Cont Qty	Unit Price ($)	C/O Ext Price ($)
	9	F&I Pipe w/GB SDR 26 - 6" Dia PVC	LF	967.31		967.31	-212.41	754.9	$0.01	-$2.12
	10	F&I Pipe w/GB SDR 26 - 18" Dia PVC	LF	5		5	-3.75	1.25	$670.00	-$2,512.50
	11	F&I Pipe w/GB SDR 35 - 10" Dia PVC	LF	1111.6000000000001		1111.6000000000001	4.56	1116.16	$275.00	$1,254.00
	12	F&I Pipe w/GB SDR 35 - 12" Dia PVC	LF	5		5	-3.67	1.33	$630.00	-$2,312.10
	14	Eliminate Sewer Service	EA	1		1	-1	0	$3,500.00	-$3,500.00
								Sanitary Sewer Sub Total		**-$17,978.49**
Water Main	18	F&I Fittings C153 Ductile Iron	LB	1350		1350	-344	1006	$15.00	-$5,160.00
	20	F&I 1-1/4" Trench Found Rock 4" thru 12" Dia	LF	1620		1620	-1620	0	$0.01	-$16.20

Section	Line No	Item Description	Unit	Orig Cont Qty	Prev C/O Qty	Prev Cont Qty	Curr C/O Qty	Tot Cont Qty	Unit Price ($)	C/O Ext Price ($)
	22	Remove Pipe All Sizes All Types	LF	195		195	-70	125	$20.00	-$1,400.00
	23	Remove Pipe Asbestos Cement	LF	195		195	-195	0	$0.01	-$1.95
	24	F&I Pipe w/GB C900 DR 18 - 6" Dia PVC	LF	48		48	7.43	55.43	$145.00	$1,077.35
	25	F&I Pipe w/GB C900 DR 18 - 8" Dia PVC	LF	410		410	4.31	414.31	$150.00	$646.50
	26	F&I Pipe w/GB C900 DR 18 - 12" Dia PVC	LF	1162		1162	-1.82	1160.18	$170.00	-$309.40
	30	Bore Pipe 1" Dia Water Service	LF	150		150	-31	119	$95.00	-$2,945.00
	31	F&I Pipe w/GB 1" Dia Water Service	LF	988.9999999999999		988.9999999999999	107.6	1096.6	$105.00	$11,298.00
	34	Eliminate Water Service	EA	1		1	-1	0	$3,000.00	-$3,000.00

Section	Line No	Item Description	Unit	Orig Cont Qty	Prev C/O Qty	Prev Cont Qty	Curr C/O Qty	Tot Cont Qty	Unit Price ($)	C/O Ext Price ($)
								Water Main Sub Total		$189.30
Storm Sewer	36	Repair Manhole Floor & Invert	EA	1		1	-1	0	$2,000.00	-$2,000.00
	38	Remove Manhole	EA	6		6	-4	2	$1,500.00	-$6,000.00
	41	Connect Pipe to Exist Pipe	EA	6		6	-4	2	$1,500.00	-$6,000.00
	42	Remove Pipe All Sizes All Types	LF	392		392	-100	292	$30.00	-$3,000.00
	43	F&I Pipe w/GB 15" Dia	LF	382.09		382.09	-5	377.09	$150.00	-$750.00
	44	F&I Pipe w/GB 12" Dia Reinf Conc	LF	3.54		3.54	2.46	6	$0.01	$0.02
	45	F&I Pipe w/GB 15" Dia Reinf Conc	LF	1.54		1.54	-1.54	0	$0.01	-$0.02
	46	F&I Pipe w/GB 33" Dia Reinf Conc	LF	23.45		23.45	-23.45	0	$550.00	-$12,897.50

Section	Line No	Item Description	Unit	Orig Cont Qty	Prev C/O Qty	Prev Cont Qty	Curr C/O Qty	Tot Cont Qty	Unit Price ($)	C/O Ext Price ($)
	47	F&I Pipe w/GB 42" Dia Reinf Conc	LF	5		5	-5	0	$850.00	-$4,250.00
	48	F&I Flat MH Cover 8" Thick Reinf Conc	EA	1		1	-1	0	$1,500.00	-$1,500.00
	49	Special Bid Item A	LS	1		1	-1	0	$3,000.00	-$3,000.00
									Storm Sewer Sub Total	**-$39,397.49**
Paving	51	F&I Casting Water Service	EA	1		1	-1	0	$400.00	-$400.00
	52	Subgrade Preparation	SY	8431		8431	50	8481	$4.00	$200.00
	53	F&I Woven Geotextile	SY	8431		8431	50	8481	$2.00	$100.00
	54	F&I Class 5 Agg - 8" Thick	SY	8431		8431	50	8481	$20.00	$1,000.00
	55	F&I Edge Drain 4" Dia PVC	LF	4309		4309	2.86	4311.86	$10.00	$28.60
	56	F&I Curb & Gutter Standard (Type II)	LF	4309		4309	2.86	4311.86	$34.00	$97.24

Section	Line No	Item Description	Unit	Orig Cont Qty	Prev C/O Qty	Prev Cont Qty	Curr C/O Qty	Tot Cont Qty	Unit Price ($)	C/O Ext Price ($)
	58	F&I Sidewalk 4" Thick Reinf Conc	SY	2106		2106	37.67	2143.67	$75.00	$2,825.25
	59	F&I Sidewalk 6" Thick Reinf Conc	SY	106.5		106.5	-4.21	102.29	$82.00	-$345.22
	61	F&I Driveway 6" Thick Reinf Conc	SY	749		749	62.95	811.95	$90.00	$5,665.50
	63	F&I Det Warn Panels Cast Iron	SF	270		270	-9	261	$60.00	-$540.00
	64	F&I Asphalt Pavement FAA 43 w/ PG58H-34	Ton	2971		2971	-120.57	2850.43	$88.00	-$10,610.16
									Paving Sub Total	**-$1,978.79**
Signing	69	F&I Sign Assembly	EA	7		7	-1	6	$80.00	-$80.00
	70	F&I Sign Assembly & Anchor	EA	16		16	1	17	$155.00	$155.00
	71	F&I Diamond Grade Cubed	SF	60.4		60.4	-1.3	59.1	$32.00	-$41.60

Section	Line No	Item Description	Unit	Orig Cont Qty	Prev C/O Qty	Prev Cont Qty	Curr C/O Qty	Tot Cont Qty	Unit Price ($)	C/O Ext Price ($)
	72	F&I High Intensity Prismatic	SF	48		48	9	57	$30.00	$270.00
								Signing Sub Total		**$303.40**
Landscaping	76	Weed Control Type B	SY	7689		7689	-7689	0	$0.10	-$768.90
	77	Irrigation Repair	EA	10		10	-6	4	$950.00	-$5,700.00
								Landscaping Sub Total		**-$6,468.90**

Summary

Source Of Funding	Waste Water Utility Funds, Water Utility Funds, Storm Utility Funds, Traffic/Street Light Utility Funds, Street Sales Tax Funds, and Special Assessments
Net Amount Change Order # 2 ($)	-$65,330.97
Previous Change Orders ($)	$16,127.11
Original Contract Amount ($)	$2,785,515.83
Total Contract Amount ($)	$2,736,311.97

I hereby accept this order both as to work to be performed and prices on which payment shall be based.

APPROVED	Jared Heller	APPROVED DATE	
For Contractor	Dakota Underground Company	Department Head	
Title	Project Manager	Mayor	
		Attest	

REPORT OF ACTION

PUBLIC WORKS PROJECTS EVALUATION COMMITTEE

12

Improvement District No. PR-26-C1 Type: Negative Final Balancing Change Order #2

Location: Citywide Date of Hearing: 11/16/2026

Routing	Date
City Commission	11/23/2026
PWPEC File	X
Project File	Jason Hoogland

The Committee reviewed the accompanying correspondence from Project Manager, Jason Hoogland, regarding Negative Final Balancing Change Order #2 in the amount of -$12,924.12, which reconciles the final quantities as measured in the field.

Staff is recommending approval of Negative Final Balancing Change Order #2 in the amount of -$12,924.12, which brings the total contract amount to $2,013,064.11.

On a motion by Susan Thompson, seconded by Nicole Crutchfield, the Committee voted to recommend approval of Negative Final Balancing Change Order #2 to Asphalt Preservation Company, Inc.

RECOMMENDED MOTION

Concur with the recommendations of PWPEC and approve Negative Final Balancing Change Order #2 in the amount of -$12,924.12, bringing the total contract amount to $2,013,064.11, to Asphalt Preservation Company, Inc.

PROJECT FINANCING INFORMATION:

Recommended source of funding for project: City Funds & Special Assessments

	Yes	No
Developer meets City policy for payment of delinquent specials	N/A	
Agreement for payment of specials required of developer	N/A	
Letter of Credit required (per policy approved 5-28-13)	N/A	

COMMITTEE	Present	Yes	No	Unanimous
				☑
Josh Boschee, Mayor	☑	☑	☐	
Nicole Crutchfield, Director of Planning	☑	☑	☐	
Gary Lorenz, Fire Chief	☑	☑	☐	
Michael Redlinger, City Administrator	☑	☑	☐	
Ben Dow, Director of Operations	☑	☑	☐	
Tom Knakmuhs, City Engineer	☑	☑	☐	
Susan Thompson, Finance Director	☑	☑	☐	

ATTEST:

Tom Knakmuhs, P.E.
City Engineer

C: Kristi Olson

THE CITY OF Fargo FAR MORE

CHANGE ORDER REPORT
SEAL COAT
IMPROVEMENT DISTRICT NO. PR-26-C1
VARIOUS LOCATIONS IN THE CITY OF FARGO

Final Balancing Change Order

Change Order No 2 **Change Order Date** 10/20/2026
Contractor Asphalt Preservation Company, Inc.

This change is made under the terms of or is supplemental to your present contract, if and when approved, you are ordered to perform the work in accordance with the additions, changes, or alterations hereinafter described.

EXPLANATION OF CHANGE Change Order # 2
Final quantities

Section	Line No	Item Description	Unit	Orig Cont Qty	Prev C/O Qty	Prev Cont Qty	Curr C/O Qty	Tot Cont Qty	Unit Price ($)	C/O Ext Price ($)
Section 1	2	F&I Pavement Mix Wear Course Asph	Ton	50		50	3.94	53.94	$900.00	$3,546.00
	3	F&I Seal Aggregate A	SY	388465		388465	-1484.19	386980.81	$1.14	-$1,691.98
	4	F&I Seal Aggregate B	SY	186807		186807	-1419.73	185387.27	$1.14	-$1,618.49
	5	F&I Seal Oil	Gal	172137		172137	-10089.54	162047.46	$2.28	-$23,004.15
	7	Tow Vehicle	EA	60		60	8	68	$175.00	$1,400.00
								Section 1 Sub Total		**-$21,368.62**
Section 1 Pavement markings	8	Paint Epoxy Line 4" Wide	LF	40717		40717	764	41481	$4.40	$3,361.60
	9	Paint Epoxy Line 8" Wide	LF	2570.5		2570.5	-47.5	2523	$7.70	-$365.75
	10	Paint Epoxy Line 16" Wide	LF	297.5		297.5	-36	261.5	$27.50	-$990.00
	12	Paint Epoxy Message	SF	1935		1935	384.5	2319.5	$27.50	$10,573.75
								Section 1 Pavement markings Sub Total		**$12,579.60**

Section	Line No	Item Description	Unit	Orig Cont Qty	Prev C/O Qty	Prev Cont Qty	Curr C/O Qty	Tot Cont Qty	Unit Price ($)	C/O Ext Price ($)
Section 2	14	F&I Seal Aggregate A	SY	80940		80940	-0.77	80939.23	$1.14	-$0.88
	15	F&I Seal Aggregate B	SY	29422		29422	27.24	29449.24	$1.14	$31.05
	16	F&I Seal Oil	Gal	31638		31638	-286.57	31351.43	$2.28	-$653.38
	17	Paint Epoxy Line 4" Wide	LF	7421.5		7421.5	-121.5	7300	$4.40	-$534.60
	18	Paint Epoxy Line 8" Wide	LF	140		140	1	141	$7.70	$7.70
	20	Paint Epoxy Message	SF	437		437	-64	373	$27.50	-$1,760.00
	22	Tow Vehicle	EA	13		13	-7	6	$175.00	-$1,225.00
								Section 2 Sub Total		**-$4,135.10**

Summary

Source Of Funding	City Funds & Special Assessments
Net Amount Change Order # 2 ($)	-$12,924.12
Previous Change Orders ($)	$0.00
Original Contract Amount ($)	$2,025,988.23
Total Contract Amount ($)	$2,013,064.10

I hereby accept this order both as to work to be performed and prices on which payment shall be based.

APPROVED
For Contractor
Title
Averre Marquis, President

APPROVED DATE
Department Head
Mayor
Attest

REPORT OF ACTION

PUBLIC WORKS PROJECTS EVALUATION COMMITTEE

13

Improvement District No. BN-25-C1 Type: Negative Final Balancing Change Order #7

Location: Dakota Commerce Center North Addn Date of Hearing: 11/16/2026

Routing	Date
City Commission	11/23/2026
PWPEC File	X
Project File	Jason Satterlund

The Committee reviewed the accompanying correspondence from Project Manager, Jason Satterlund, regarding Negative Final Balancing Change Order #7 in the amount of -$81,578.37, which reconciles the final quantities as measured in the field.

Staff is recommending approval of Negative Final Balancing Change Order #7 in the amount of -$81,578.37, which brings the total contract amount to $8,529,763.86.

On a motion by Susan Thompson, seconded by Nicole Crutchfield, the Committee voted to recommend approval of Negative Final Balancing Change Order #7 to Dakota Underground.

RECOMMENDED MOTION

Concur with the recommendations of PWPEC and approve Negative Final Balancing Change Order #7 in the amount of -$81,578.37, bringing the total contract amount to $8,529,763.86, to Dakota Underground.

PROJECT FINANCING INFORMATION:

Recommended source of funding for project: Special Assessments

	Yes	No
Developer meets City policy for payment of delinquent specials	N/A	
Agreement for payment of specials required of developer	N/A	
Letter of Credit required (per policy approved 5-28-13)	N/A	

COMMITTEE	Present	Yes	No	Unanimous
				☑
Josh Boschee, Mayor	☑	☑	☐	
Nicole Crutchfield, Director of Planning	☑	☑	☐	
Gary Lorenz, Fire Chief	☑	☑	☐	
Michael Redlinger, City Administrator	☑	☑	☐	
Ben Dow, Director of Operations	☑	☑	☐	
Tom Knakmuhs, City Engineer	☑	☑	☐	
Susan Thompson, Finance Director	☑	☑	☐	

ATTEST:

Tom Knakmuhs, P.E.
City Engineer

C: Kristi Olson

CHANGE ORDER REPORT
NEW PAVING AND UTILITY CONSTRUCTION
IMPROVEMENT DISTRICT NO. BN-25-C1
DAKOTA COMMERCE CENTER NORTH - PHASE II

Change Order No 7 **Change Order Date** 11/9/2026
Contractor Dakota Underground Co Inc

This change is made under the terms of or is supplemental to your present contract, if and when approved, you are ordered to perform the work in accordance with the additions, changes, or alterations hereinafter described.

EXPLANATION OF CHANGE Change Order # 7
Final Balancing

Section	Line No	Item Description	Unit	Orig Cont Qty	Prev C/O Qty	Prev Cont Qty	Curr C/O Qty	Tot Cont Qty	Unit Price ($)	C/O Ext Price ($)
Miscellaneous	3	Sediment Control Log 6" to 8" Dia	LF	2920		2920	-2730	190	$3.30	-$9,009.00
								Miscellaneous Sub Total		**-$9,009.00**
Change Order 4	17	F&I Insulation 4" Thick	SY	-8.03	0	10.7	-8.03	2.67	$56.00	-$449.68
								Change Order 4 Sub Total		**-$449.68**
Ditch Grading	26	Install Salvaged Pipe All Sizes Corr Steel	LF	60		60	-60	0	$40.00	-$2,400.00
	28	Salvage Pipe All Sizes Corr Steel	LF	60		60	-60	0	$30.00	-$1,800.00

Section	Line No	Item Description	Unit	Orig Cont Qty	Prev C/O Qty	Prev Cont Qty	Curr C/O Qty	Tot Cont Qty	Unit Price ($)	C/O Ext Price ($)
	31	Mulching Type 2 Straw	SY	8033		8033	3066	11099	$0.33	$1,011.78
	32	Seeding Type C	SY	8033		8033	3066	11099	$0.33	$1,011.78
								Ditch Grading Sub Total		**-$2,176.44**
Sanitary Sewer	34	F&I Manhole GB	EA	8		8	-2	6	$6,000.00	-$12,000.00
	37	F&I 1-1/4" Trench Found Rock 14" thru 24" Dia	LF	1698		1698	-803	895	$0.01	-$8.03
	40	Bore Pipe SDR 26 - 6" Dia PVC	LF	100		100	-69	31	$200.00	-$13,800.00
	41	Bore Pipe SDR 35 - 15" Dia PVC	LF	20		20	1	21	$380.00	$380.00
	42	F&I Pipe SDR 26 - 6" Dia PVC	LF	325		325	4	329	$60.00	$240.00
	43	F&I Pipe SDR 26 - 8" Dia PVC	LF	23		23	2	25	$220.00	$440.00

Section	Line No	Item Description	Unit	Orig Cont Qty	Prev C/O Qty	Prev Cont Qty	Curr C/O Qty	Tot Cont Qty	Unit Price ($)	C/O Ext Price ($)
	44	F&I Pipe SDR 35 - 15" Dia PVC	LF	1600		1600	-5	1595	$130.00	-$650.00
	46	Remove Pipe All Sizes All Types	LF	335		335	-8	327	$30.00	-$240.00
	48	F&I Pipe w/GB SDR 26 - 8" Dia PVC	LF	98		98	-23	75	$400.00	-$9,200.00
	50	F&I Force Main - Fittings	LB	4417	0	4691	58	4749	$25.00	$1,450.00
	51	F&I Force Main 6" Dia	LF	195		195	0.8	195.8	$115.00	$92.00
	52	F&I Force Main 10" Dia	LF	9.5	0	56	-8.5	47.5	$135.00	-$1,147.50
	53	F&I Force Main 36" Dia	LF	83		83	1.2	84.2	$950.00	$1,140.00
								Sanitary Sewer Sub Total		**-$33,303.53**
Water Main	56	F&I Hydrant	EA	3		3	1	4	$7,500.00	$7,500.00
	57	F&I Hydrant - Restrained Joint	EA	10		10	-1	9	$8,000.00	-$8,000.00

Section	Line No	Item Description	Unit	Orig Cont Qty	Prev C/O Qty	Prev Cont Qty	Curr C/O Qty	Tot Cont Qty	Unit Price ($)	C/O Ext Price ($)
	59	Bore Pipe C900 DR 18 - 4" Dia PVC	LF	20		20	-13	7	$130.00	-$1,690.00
	60	Bore Pipe C900 DR 18 - 6" Dia PVC	LF	20		20	-12	8	$135.00	-$1,620.00
	61	Bore Pipe C900 DR 18 - 8" Dia PVC	LF	20		20	-20	0	$140.00	-$2,800.00
	62	Bore Pipe C900 DR 18 - 12" Dia PVC	LF	20		20	-9	11	$200.00	-$1,800.00
	63	F&I Pipe C900 DR 18 - 4" Dia PVC	LF	60		60	-5	55	$100.00	-$500.00
	64	F&I Pipe C900 DR 18 - 6" Dia PVC	LF	180		180	-10.9	169.1	$115.00	-$1,253.50
	65	F&I Pipe C900 DR 18 - 8" Dia PVC	LF	2445		2445	36.55	2481.55	$75.00	$2,741.25

Section	Line No	Item Description	Unit	Orig Cont Qty	Prev C/O Qty	Prev Cont Qty	Curr C/O Qty	Tot Cont Qty	Unit Price ($)	C/O Ext Price ($)
	66	F&I Pipe C900 DR 18 - 12" Dia PVC	LF	20		20	2	22	$195.00	$390.00
	67	F&I Pipe w/GB C900 DR 18 - 8" Dia PVC	LF	105		105	10	115	$150.00	$1,500.00
	68	F&I Pipe w/GB C900 DR 18 - 12" Dia PVC	LF	5		5	-5	0	$200.00	-$1,000.00
	69	F&I Restr Joint Pipe C900 DR 18 - 12" Dia PVC	LF	52		52	2	54	$230.00	$460.00
	70	F&I Restr Joint Pipe C900 DR 18 - 16" Dia PVC	LF	130		130	-13.4	116.6	$320.00	-$4,288.00
	76	F&I Gate Valve 8" Dia	EA	2		2	1	3	$3,850.00	$3,850.00
	77	F&I Hydrant Ext. 12" High	EA	4		4	5	9	$1,620.00	$8,100.00
								Water Main Sub Total		**$1,589.75**
Cass Rural Water	83	F&I Pipe 12" Dia	LF	120		120	-24	96	$200.00	-$4,800.00

Section	Line No	Item Description	Unit	Orig Cont Qty	Prev C/O Qty	Prev Cont Qty	Curr C/O Qty	Tot Cont Qty	Unit Price ($)	C/O Ext Price ($)
	84	F&I Fittings C153 Ductile Iron	LB	86		86	-86	0	$26.00	-$2,236.00
							Cass Rural Water Sub Total			**-$7,036.00**
Storm Sewer	85	F&I Manhole GB	EA	3		3	-1	2	$6,000.00	-$6,000.00
	97	F&I 1-1/4" Trench Found Rock 27" thru 36" Dia	LF	825		825	-825	0	$0.01	-$8.25
	98	F&I 1-1/4" Trench Found Rock 42" thru 54" Dia	LF	3632		3632	-3632	0	$0.01	-$36.32
	99	F&I 1-1/4" Trench Found Rock 60" Plus Dia	LF	166		166	-166	0	$10.00	-$1,660.00
	102	F&I Pipe 12" Dia	LF	512		512	-48.17	463.83	$70.00	-$3,371.90
	103	F&I Pipe 15" Dia	LF	25		25	-2.7	22.3	$85.00	-$229.50
	104	F&I Pipe 18" Dia	LF	260		260	1.02	261.02	$87.00	$88.74
	105	F&I Pipe 24" Dia	LF	126		126	53.02	179.02	$100.00	$5,302.00

Section	Line No	Item Description	Unit	Orig Cont Qty	Prev C/O Qty	Prev Cont Qty	Curr C/O Qty	Tot Cont Qty	Unit Price ($)	C/O Ext Price ($)
	106	F&I Pipe 30" Dia	LF	426.00000000000006		426.00000000000006	131.7	557.7	$120.00	$15,804.00
	107	F&I Pipe 36" Dia	LF	1868		1868	-32.35	1835.65	$142.00	-$4,593.70
	108	F&I Pipe 48" Dia	LF	3632		3632	14	3646	$207.00	$2,898.00
	110	Remove Pipe All Sizes All Types	LF	768		768	-52	716	$30.00	-$1,560.00
	112	F&I Pipe w/GB 15" Dia	LF	80		80	-1	79	$95.00	-$95.00
	113	F&I Pipe w/GB 18" Dia	LF	296		296	-3	293	$105.00	-$315.00
	114	F&I Pipe w/GB 24" Dia	LF	192		192	-65.99	126.01	$175.00	-$11,548.25
	115	F&I Pipe w/GB 36" Dia	LF	138		138	-78	60	$200.00	-$15,600.00
	120	F&I Flared End Section 24" Dia Corr Steel	EA	2		2	-1	1	$500.00	-$500.00
								Storm Sewer Sub Total		**-$21,425.18**

Section	Line No	Item Description	Unit	Orig Cont Qty	Prev C/O Qty	Prev Cont Qty	Curr C/O Qty	Tot Cont Qty	Unit Price ($)	C/O Ext Price ($)
Paving	132	F&I Crushed Conc - 10" Thick	SY	245		245	588	833	$20.00	$11,760.00
	133	F&I Edge Drain 4" Dia PVC	LF	12560		12560	-11	12549	$9.00	-$99.00
	134	F&I Curb & Gutter Standard (Type II)	LF	11906		11906	23.3	11929.3	$29.00	$675.70
	137	F&I Pavement 10" Thick Doweled Conc	SY	22850		22850	-5.7	22844.3	$93.00	-$530.10
	138	F&I Sidewalk 4" Thick Reinf Conc	SY	2334		2334	6.6	2340.6	$68.00	$448.80
	139	F&I Sidewalk 5" Thick Reinf Conc	SY	2970		2970	1.1	2971.1	$73.00	$80.30
	140	F&I Sidewalk 6" Thick Reinf Conc	SY	48		48	3.5	51.5	$80.00	$280.00

Section	Line No	Item Description	Unit	Orig Cont Qty	Prev C/O Qty	Prev Cont Qty	Curr C/O Qty	Tot Cont Qty	Unit Price ($)	C/O Ext Price ($)
	141	F&I Driveway 7" Thick Reinf Conc	SY	860		860	-88.1	771.9	$84.00	-$7,400.40
	142	F&I Det Warn Panels Cast Iron	SF	120		120	8	128	$60.00	$480.00
	143	Casting to Grade - Blvd	EA	43		43	3	46	$400.00	$1,200.00
	144	Casting to Grade - no Conc	EA	29		29	-2	27	$500.00	-$1,000.00
	145	GV Box to Grade - Blvd	EA	40		40	1	41	$300.00	$300.00
	146	GV Box to Grade - no Conc	EA	8		8	1	9	$500.00	$500.00
	147	F&I Asphalt Pavement FAA 45 w/ PG58H-34	Ton	890		890	45.01	935.01	$115.00	$5,176.15
	148	F&I Traffic Surface Gravel	Ton	100		100	-68.95	31.05	$40.00	-$2,758.00
	149	Mill / Grind Asphalt Pvmt 1" to 2" Thick	SY	300		300	-300	0	$30.00	-$9,000.00

Section	Line No	Item Description	Unit	Orig Cont Qty	Prev C/O Qty	Prev Cont Qty	Curr C/O Qty	Tot Cont Qty	Unit Price ($)	C/O Ext Price ($)
	150	Mulching Type 1 Hydro	SY	38955		38955	-1456.1	37498.9	$0.50	-$728.05
	151	Mulching Type 2 Straw	SY	38070		38070	-19745.1	18324.9	$0.22	-$4,343.92
	152	Seeding Type C	SY	77025		77025	-23383.6	53641.4	$0.27	-$6,313.57
									Paving Sub Total	**-$11,272.09**
Signing	155	Relocate Sign Assembly	EA	3		3	1	4	$320.00	$320.00
	156	F&I Sign Assembly & Anchor	EA	26		26	-2	24	$100.00	-$200.00
	157	F&I Diamond Grade Cubed	SF	36.199999999999996		36.199999999999996	2.2	38.4	$29.00	$63.80
									Signing Sub Total	**$183.80**
Pavement Marking	162	Paint Epoxy Line 4" Wide	LF	487		487	200	687	$6.60	$1,320.00
									Pavement Marking Sub Total	**$1,320.00**

Summary

Source Of Funding	Special Assessments
Net Amount Change Order # 7 ($)	-$81,578.37
Previous Change Orders ($)	$25,423.42
Original Contract Amount ($)	$8,585,918.81
Total Contract Amount ($)	$8,529,763.86

I hereby accept this order both as to work to be performed and prices on which payment shall be based.

APPROVED	Jared Heller	APPROVED DATE	
For Contractor	Dakota Underground Company	Department Head	T-Lee
Title	Project Manager	Mayor	
		Attest	

THE CITY OF Fargo FAR MORE

14

Engineering Department
225 4th Street North
Fargo, ND 58102
Phone: 701.241.1545 | Fax: 701.241.8101
Email: feng@FargoND.gov
www.FargoND.gov

November 18, 2026

Honorable Board of City
Commissioners
City of Fargo
Fargo, ND

Re: Improvement District No. BR-27-C1

Dear Commissioners:

Bids were opened at 11:45 am on Wednesday, November 18th, 2026, for Paving and Utility Rehab/Reconstruction, Improvement District No. BR-27-C1, located as follows: On 1st Street North from 7th Avenue to 11th Avenue and on 8th Avenue North from 1st Street to Oak Street.

The bids were as follows:

Key Contracting Inc	$2,947,156.65
Dakota Underground Co Inc	$3,347,263.84
Master Holdings LLC	$3,411,625.50
Northern Improvement Co	$3,469,870.90
KPH, Inc.	$3,540,968.80
Sellin Bros, Inc	$4,556,938.20
Border States Paving Inc	$4,603,250.61
Engineers Estimate	$3,554,884.00

Private financial security is not needed.

No protests have been received.

This office recommends award of the contract to Key Contracting Inc. in the amount of $2,947,156.65 as the lowest and best bid.

Sincerely,

Thomas Knakmuhs, P.E.
City Engineer

THE CITY OF Fargo FAR MORE

Engineer's Statement Of Cost

Improvement District # BR-27-C1

Paving And Utility Rehab/Reconstruction

On 1st Street North from 7th Avenue to 11th Avenue and on 8th Avenue North from 1st Street to Oak Street.

WHEREAS, bids have been opened and filed for the above described Improvement District for City of Fargo, North Dakota; and WHEREAS, an estimate of the cost of work is required by the engineer for the City of Fargo, North Dakota;

NOW THEREFORE Thomas Knakmuhs, do hereby certify as follows:

That I am the City Engineer for the City of Fargo, North Dakota;

That the following is detailed statement of the estimated cost of the job described as:

Paving and Utility Rehab/Reconstruction Improvement District # BR-27-C1 of the City of Fargo, North Dakota.

Line	Description	Unit	Quantity	Unit Price ($)	Amount ($)
Sanitary Sewer					
1	Remove Pipe All Sizes All Types	LF	140.00	30.00	4,200.00
2	Remove Manhole	EA	4.00	1,000.00	4,000.00
3	Bore Pipe SDR 26 - 6" Dia PVC	LF	50.00	155.00	7,750.00
4	F&I Pipe w/GB SDR 26 - 6" Dia PVC	LF	1,700.00	110.00	187,000.00
5	F&I Pipe w/GB SDR 26 - 10" Dia PVC	LF	85.00	175.00	14,875.00
6	F&I Force Main w/GB 14" Dia	LF	115.00	200.00	23,000.00
7	F&I Force Main - Fittings	LB	896.00	22.00	19,712.00
8	F&I Manhole 4' Dia Reinf Conc	EA	4.00	12,350.00	49,400.00
9	Connect Sewer Service	EA	77.00	2,000.00	154,000.00
10	Connect Pipe to Exist Pipe	EA	14.00	1,500.00	21,000.00
11	Clean Pipe All Sizes All Types	LF	2,006.00	4.50	9,027.00
				Sanitary Sewer Total	**493,964.00**
Water Main					
12	Remove Pipe All Sizes All Types	LF	185.00	30.00	5,550.00
13	F&I Hydrant	EA	6.00	7,750.00	46,500.00
14	F&I Hydrant Ext. 6" High	EA	1.00	1,950.00	1,950.00
15	F&I Fittings C153 Ductile Iron	LB	1,438.00	14.00	20,132.00
16	Connect Pipe to Exist Pipe	EA	5.00	1,500.00	7,500.00
17	F&I Pipe w/GB C900 DR 18 - 6" Dia PVC	LF	75.00	130.00	9,750.00
18	F&I Pipe w/GB C900 DR 18 - 8" Dia PVC	LF	365.00	152.50	55,662.50

Line	Description	Unit	Quantity	Unit Price ($)	Amount ($)
19	F&I Pipe w/GB C900 DR 18 - 10" Dia PVC	LF	1,920.00	160.00	307,200.00
20	F&I Gate Valve 6" Dia	EA	7.00	2,950.00	20,650.00
21	F&I Gate Valve 8" Dia	EA	3.00	3,750.00	11,250.00
22	F&I Gate Valve 10" Dia	EA	5.00	5,550.00	27,750.00
23	Furnish Temp Water Svc	EA	77.00	1,200.00	92,400.00
24	Connect Water Service	EA	77.00	550.00	42,350.00
25	F&I Pipe 1" Dia Water Service	LF	2,250.00	70.00	157,500.00
26	Bore Pipe 1" Dia Water Service	LF	100.00	100.00	10,000.00
27	F&I Pipe w/GB 1.5" Dia Water Service	LF	120.00	115.00	13,800.00
28	F&I Pipe w/GB 2" Dia Water Service	LF	130.00	130.00	16,900.00
29	Rem & Repl CS & Box 1" Dia	EA	69.00	1,050.00	72,450.00
30	Rem & Repl CS & Box 1.5" Dia	EA	4.00	1,250.00	5,000.00
31	Rem & Repl CS & Box 2" Dia	EA	4.00	1,550.00	6,200.00
32	F&I Casting Water Service	EA	6.00	350.00	2,100.00
33	F&I 1-1/4" Trench Found Rock 4" thru 12" Dia	LF	300.00	5.00	1,500.00
				Water Main Total	**934,094.50**
Storm Sewer					
34	Remove Pipe All Sizes All Types	LF	470.00	30.00	14,100.00
35	Remove Manhole	EA	9.00	2,000.00	18,000.00
36	Remove Inlet	EA	12.00	2,500.00	30,000.00
37	Connect Pipe to Exist Pipe	EA	12.00	1,750.00	21,000.00
38	Connect Pipe to Exist Structure	EA	3.00	2,750.00	8,250.00
39	F&I Inlet - Single Box (SBI) Reinf Conc	EA	11.00	4,000.00	44,000.00
40	F&I Manhole 4' Dia Reinf Conc	EA	3.00	7,550.00	22,650.00
41	F&I Manhole 5' Dia Reinf Conc	EA	2.00	8,450.00	16,900.00
42	F&I Inlet - Manhole (MHI) 4' Dia Reinf Conc	EA	7.00	6,550.00	45,850.00
43	F&I Pipe w/GB SDR 35 - 12" Dia PVC	LF	6.00	120.00	720.00
44	F&I Pipe w/GB 15" Dia	LF	625.00	130.00	81,250.00
45	F&I Pipe w/GB 18" Dia	LF	18.00	150.00	2,700.00
46	F&I Pipe w/GB 24" Dia	LF	161.00	165.00	26,565.00
47	F&I Pipe w/GB 12" Dia Reinf Conc	LF	12.00	120.00	1,440.00
48	F&I Pipe w/GB 24" Dia Reinf Conc	LF	24.00	165.00	3,960.00
49	F&I Pipe w/GB 36" Dia Reinf Conc	LF	21.00	235.00	4,935.00
50	F&I Pipe Liner 18" Dia Gravity CIPP	LF	507.00	201.30	102,059.10
51	Repair Manhole Floor & Invert	EA	2.00	2,500.00	5,000.00

Line	Description	Unit	Quantity	Unit Price ($)	Amount ($)
52	Repair Pipe 24" Dia	EA	1.00	4,500.00	4,500.00
53	F&I Controlled Density Fill	CY	9.00	185.00	1,665.00
				Storm Sewer Total	**455,544.10**
Paving					
54	Remove Pavement All Thicknesses All Types	SY	7,070.00	5.00	35,350.00
55	Remove Curb & Gutter	LF	4,460.00	5.00	22,300.00
56	Remove Sidewalk All Thicknesses All Types	SY	2,625.00	5.00	13,125.00
57	Remove Driveway All Thicknesses All Types	SY	400.00	5.00	2,000.00
58	Rem & Repl Casting - Std Manhole	EA	2.00	950.00	1,900.00
59	Rem & Repl Casting - Inlet	EA	4.00	1,200.00	4,800.00
60	Rem & Repl Casting - Self Leveling	EA	1.00	2,000.00	2,000.00
61	Casting to Grade - Blvd	EA	3.00	400.00	1,200.00
62	Casting to Grade - w/Conc	EA	22.00	475.00	10,450.00
63	Casting to Grade - no Conc	EA	8.00	650.00	5,200.00
64	Subgrade Preparation	SY	8,820.00	3.00	26,460.00
65	F&I Woven Geotextile	SY	8,820.00	2.17	19,139.40
66	F&I Class 5 Agg - 8" Thick	SY	8,820.00	12.50	110,250.00
67	F&I Edge Drain 4" Dia PVC	LF	4,460.00	10.45	46,607.00
68	F&I Curb & Gutter Standard (Type II)	LF	4,460.00	30.66	136,743.60
69	F&I Asphalt Pavement FAA 43 w/ PG58H-34	Ton	3,000.00	97.65	292,950.00
70	F&I Sidewalk 4" Thick Reinf Conc	SY	2,500.00	66.57	166,425.00
71	F&I Sidewalk 6" Thick Reinf Conc	SY	95.00	72.98	6,933.10
72	F&I Driveway 6" Thick Reinf Conc	SY	530.00	81.92	43,417.60
73	F&I Det Warn Panels Cast Iron	SF	234.00	64.05	14,987.70
74	F&I Flat MH Cover 8" Thick Reinf Conc	EA	1.00	1,750.00	1,750.00
75	GV Box to Grade - Blvd	EA	6.00	350.00	2,100.00
76	GV Box to Grade - no Conc	EA	9.00	350.00	3,150.00
77	Boulevard Grading	SY	5,600.00	5.00	28,000.00
78	Seeding Type C	SY	5,600.00	2.31	12,936.00
79	Mulching Type 1 Hydro	SY	5,600.00	1.93	10,808.00
80	Weed Control Type B	SY	5,600.00	0.11	616.00
81	Stormwater Management	LS	1.00	500.00	500.00
82	Temp Construction Entrance	EA	2.00	500.00	1,000.00
83	Inlet Protection - Existing Inlet	EA	27.00	236.50	6,385.50
84	Inlet Protection - New Inlet	EA	20.00	258.50	5,170.00

Line	Description	Unit	Quantity	Unit Price ($)	Amount ($)
85	Traffic Control - Type 1	LS	1.00	7,348.00	7,348.00
86	Construction Signing	SF	25.00	26.40	660.00
87	Irrigation Repair	EA	15.00	1,000.00	15,000.00
88	F&I Bare Root Decid Tree 1.5" Dia	EA	3.00	632.50	1,897.50
				Paving Total	**1,059,559.40**
Signing					
89	F&I Sign Assembly	EA	8.00	71.50	572.00
90	F&I Sign Assembly & Anchor	EA	8.00	110.00	880.00
91	F&I Diamond Grade Cubed	SF	58.20	33.00	1,920.60
92	F&I High Intensity Prismatic	SF	19.50	31.90	622.05
				Signing Total	**3,994.65**
				Total Construction in $	**2,947,156.65**

Engineering	10.00%	294,715.67
Admin	4.00%	117,886.27
Legal	3.00%	88,414.70
Interest	4.00%	117,886.27
Contingency	5.00%	147,357.84
Total Estimated Costs		**3,713,417.40**
Special Assessments		805,659.63
Sales Tax Funds - Infrastructure - 420		313,949.74
Utility Funds - Street Lights - 528		5,033.27
Utility Funds - Stormwater - 524		286,992.78
Utility Funds - Wastewater - 521		956,155.85
Utility Funds - Water - 501		1,345,626.13
Unfunded Costs		**0.00**

IN WITNESS THEREOF, I have hereunto set my hand and seal

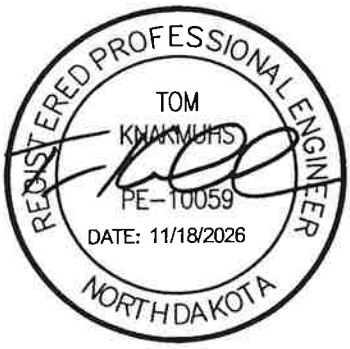

Thomas Knakmuhs, P.E.
City Engineer

RESOLUTIONS PERTAINING TO IMPROVEMENT DISTRICT NO. BR-27-C
PAVING AND UTILITY REHAB/RECONSTRUCTION
Determining Insufficiency of Protests

BE IT RESOLVED BY THE BOARD OF CITY COMMISSIONERS OF THE CITY OF FARGO:

WHEREAS, The Board of City Commissioners of the City of Fargo, North Dakota (the "Board"), has created by resolution Improvement District No. BR-27-C (the "Improvement District") in the City of Fargo, North Dakota (the "City"), as required by North Dakota Century Code, Chapter 40-22 (the "Act"); and

WHEREAS, the Plans and Specifications and the Engineer's Report prepared by the City Engineer, have been considered, as required by the Act; and

WHEREAS, the City has caused the resolution of necessity for the project relating to the Improvement District (the "Resolution") to be published once each week for two consecutive weeks in the official newspaper of the City, as required by the Act; and

WHEREAS, the Act provides that, if within thirty days after the first publication of the Resolution the owners of any property within the Improvement District file written protests describing the property which is the subject of the protest with the city auditor protesting against the adoption of said Resolution, the Board, at its next meeting after the expiration of the time for filing such protests, shall hear and determine the sufficiency thereof; and

WHEREAS, thirty days have passed since the date of the first publication of the Resolution and the time for filing protests has expired;

NOW THEREFORE BE IT RESOLVED, that the Board hereby finds that the written protests received are insufficient to bar any of the proceedings relating to the project in the Improvement District.

C E R T I F I C A T E

STATE OF NORTH DAKOTA)
)
COUNTY OF CASS) **ss.**

I, Susan Thompson, the duly appointed, qualified and acting City Auditor of the City of Fargo, North Dakota do hereby certify that the foregoing is a full, true and correct copy of the resolution adopted by the Board of City Commissioners of the City of Fargo at the Regular Meeting of the Board held on the 23rd day of November, 2026.

IN WITNESS WHEREOF, I have hereunto set my hand and affixed the Seal of the City of Fargo, North Dakota, this 23rd day of November, 2026.

_____
Susan Thompson
City Auditor

(SEAL)

REPORT OF ACTION

PUBLIC WORKS PROJECTS EVALUATION COMMITTEE

15

Project No. TM-26-B1

Type: Negative Final Balancing Change Order #3

Location: Citywide

Date of Hearing: 11/16/2026

Routing	Date
City Commission	11/23/2026
PWPEC File	X
Project File	Nick Askew

The Committee reviewed the accompanying correspondence from Project Manager, Nick Askew, regarding Negative Final Balancing Change Order #3 in the amount of -$7,624.50, which reconciles the final quantities as measured in the field.

Staff is recommending approval of Negative Final Balancing Change Order #3 in the amount of -$7,624.50, which brings the total contract amount to $76,437.50.

On a motion by Susan Thompson, seconded by Nicole Crutchfield, the Committee voted to recommend approval of Negative Final Balancing Change Order #3 to Northstar Safety, Inc.

RECOMMENDED MOTION

Concur with the recommendations of PWPEC and approve Negative Final Balancing Change Order #3 in the amount of -$7,624.50, bringing the total contract amount to $76,437.50, to Northstar Safety, Inc.

PROJECT FINANCING INFORMATION:

Recommended source of funding for project: Street Light Utility Funds

	Yes	No
Developer meets City policy for payment of delinquent specials	N/A	
Agreement for payment of specials required of developer	N/A	
Letter of Credit required (per policy approved 5-28-13)	N/A	

COMMITTEE

	Present	Yes	No	Unanimous
				☑
Josh Boschee, Mayor	☑	☑	☐	
Nicole Crutchfield, Director of Planning	☑	☑	☐	
Gary Lorenz, Fire Chief	☑	☑	☐	
Michael Redlinger, City Administrator	☑	☑	☐	
Ben Dow, Director of Operations	☑	☑	☐	
Tom Knakmuhs, City Engineer	☑	☑	☐	
Susan Thompson, Finance Director	☑	☑	☐	

Tom Knakmuhs, P.E.
City Engineer

ATTEST:

C: Kristi Olson

THE CITY OF Fargo FAR MORE

CHANGE ORDER REPORT
PAVEMENT MARKINGS
PROJECT NO. TM-26-B1
VARIOUS LOCATIONS CITYWIDE

Final Balancing Change Order

Change Order No 3 **Change Order Date** 11/9/2026
Contractor Northstar Safety Inc

This change is made under the terms of or is supplemental to your present contract, if and when approved, you are ordered to perform the work in accordance with the additions, changes, or alterations hereinafter described.

EXPLANATION OF CHANGE Change Order # 3
Final Balancing Change Order

Section	Line No	Item Description	Unit	Orig Cont Qty	Prev C/O Qty	Prev Cont Qty	Curr C/O Qty	Tot Cont Qty	Unit Price ($)	C/O Ext Price ($)
Site 1	1	Paint Epoxy Line 4" Wide	LF	1551	280	5228	-1921	3307	$3.50	-$6,723.50
	2	Paint Epoxy Line 8" Wide	LF	-593	113	40	-40	0	$8.00	-$320.00
	3	Paint Epoxy Message	SF	32	0	80	-16	64	$25.00	-$400.00
								Site 1 Sub Total		**-$7,443.50**
Change Order 2	10	Paint Epoxy Line 4" Wide	LF	-1254	280	540	-38	502	$5.50	-$209.00
	11	Paint Epoxy Line 4" Wide	LF	-1462	280	280	14	294	$6.00	$84.00
	12	Paint Epoxy Line 8" Wide	LF	-450	113	113	30	143	$12.00	$360.00
	13	Paint Epoxy Line 16" Wide	LF	4	47	47	4	51	$30.00	$120.00
								Change Order 2 Sub Total		**$355.00**
Site 2	15	Paint Epoxy Line 4" Wide	LF	-1126	280	733	-103	630	$4.00	-$412.00

Section	Line No	Item Description	Unit	Orig Cont Qty	Prev C/O Qty	Prev Cont Qty	Curr C/O Qty	Tot Cont Qty	Unit Price ($)	C/O Ext Price ($)
	16	Paint Epoxy Line 8" Wide	LF	164	113	696	61	757	$8.00	$488.00
	17	Paint Epoxy Message	SF	88	0	128	-8	120	$25.00	-$200.00
									Site 2 Sub Total	**-$124.00**
Site 3	18	Paint Epoxy Line 4" Wide	LF	-569	280	1290	-103	1187	$4.00	-$412.00
									Site 3 Sub Total	**-$412.00**

Summary

Source Of Funding	Utility Funds - Street Lights - 528
Net Amount Change Order # 3 ($)	-$7,624.50
Previous Change Orders ($)	$22,340.00
Original Contract Amount ($)	$61,722.00
Total Contract Amount ($)	$76,437.50

I hereby accept this order both as to work to be performed and prices on which payment shall be based.

APPROVED		APPROVED DATE	
For Contractor	NorthStar Safety Inc	Department Head	
Title	Branch Manager	Mayor	
		Attest	

REPORT OF ACTION

PUBLIC WORKS PROJECTS EVALUATION COMMITTEE

16

Project No. TM-25-B1

Type: Negative Final Balancing Change Order #3

Location: Citywide

Date of Hearing: 11/16/2026

Routing	Date
City Commission	11/23/2026
PWPEC File	X
Project File	Nick Askew

The Committee reviewed the accompanying correspondence from Project Manager, Nick Askew, regarding Negative Final Balancing Change Order #3 in the amount of -$23,913.00, which reconciles the final quantities as measured in the field.

Staff is recommending approval of Negative Final Balancing Change Order #3 in the amount of -$23,913.00, which brings the total contract amount to $561,543.00.

On a motion by Susan Thompson, seconded by Nicole Crutchfield, the Committee voted to recommend approval of Negative Final Balancing Change Order #3 to Northstar Safety, Inc.

RECOMMENDED MOTION

Concur with the recommendations of PWPEC and approve Negative Final Balancing Change Order #3 in the amount of -$23,913.00, bringing the total contract amount to $561,543.00, to Northstar Safety, Inc.

PROJECT FINANCING INFORMATION:

Recommended source of funding for project: Street Light Utility Funds

	Yes	No
Developer meets City policy for payment of delinquent specials	N/A	
Agreement for payment of specials required of developer	N/A	
Letter of Credit required (per policy approved 5-28-13)	N/A	

COMMITTEE	Present	Yes	No	Unanimous
				☑
Josh Boschee, Mayor	☑	☑	☐	
Nicole Crutchfield, Director of Planning	☑	☑	☐	
Gary Lorenz, Fire Chief	☑	☑	☐	
Michael Redlinger, City Administrator	☑	☑	☐	
Ben Dow, Director of Operations	☑	☑	☐	
Tom Knakmuhs, City Engineer	☑	☑	☐	
Susan Thompson, Finance Director	☑	☑	☐	

ATTEST:

Tom Knakmuhs, P.E.
City Engineer

C: Kristi Olson

THE CITY OF Fargo FAR MORE

CHANGE ORDER REPORT
PAVEMENT MARKINGS
PROJECT NO. TM-25-B1
VARIOUS LOCATIONS CITYWIDE

Final Balancing Change Order

Change Order No 3 **Change Order Date** 11/9/2026
Contractor Northstar Safety Inc

This change is made under the terms of or is supplemental to your present contract, if and when approved, you are ordered to perform the work in accordance with the additions, changes, or alterations hereinafter described.

EXPLANATION OF CHANGE Change Order # 3
Final Balancing Change Order

Section	Line No	Item Description	Unit	Orig Cont Qty	Prev C/O Qty	Prev Cont Qty	Curr C/O Qty	Tot Cont Qty	Unit Price ($)	C/O Ext Price ($)
Site 01	1	Paint Epoxy Line 4" Wide	LF	3247	0	4933	-417	4516	$3.80	-$1,584.60
								Site 01 Sub Total		**-$1,584.60**
Change Order 2	8	F&I Methacrylate 16" Wide	LF	-222	225	40	3	43	$60.00	$180.00
	9	F&I Methacrylate 16" Wide	LF	-76	225	225	-36	189	$60.00	-$2,160.00
								Change Order 2 Sub Total		**-$1,980.00**
Site 02	10	Paint Epoxy Line 4" Wide	LF	-819	0	472	-22	450	$6.00	-$132.00
								Site 02 Sub Total		**-$132.00**
Site 03	11	F&I Methacrylate 24" Wide	LF	296		296	-216	80	$75.00	-$16,200.00
								Site 03 Sub Total		**-$16,200.00**
Site 04	12	F&I Methacrylate 24" Wide	LF	60		60	-18	42	$75.00	-$1,350.00
								Site 04 Sub Total		**-$1,350.00**
Site 05	13	F&I Methacrylate 24" Wide	LF	126		126	12	138	$75.00	$900.00
								Site 05 Sub Total		**$900.00**
Site 06	14	Paint Epoxy Line 4" Wide	LF	41	0	822	488	1310	$6.00	$2,928.00
	15	Paint Epoxy Line 8" Wide	LF	-420	0	230	-7	223	$12.00	-$84.00

Section	Line No	Item Description	Unit	Orig Cont Qty	Prev C/O Qty	Prev Cont Qty	Curr C/O Qty	Tot Cont Qty	Unit Price ($)	C/O Ext Price ($)
	16	Paint Epoxy Line 16" Wide	LF	25	0	50	-5	45	$30.00	-$150.00
	17	Paint Epoxy Message	SF	-118	0	16	48	64	$30.00	$1,440.00
								Site 06 Sub Total		**$4,134.00**
Site 07	18	Obliterate Pavement Markings	SF	325		325	-295	30	$6.00	-$1,770.00
	19	F&I Methacrylate 24" Wide	LF	304		304	212	516	$75.00	$15,900.00
	20	Paint Epoxy Line 4" Wide	LF	-1269	0	160	-160	0	$15.00	-$2,400.00
								Site 07 Sub Total		**$11,730.00**
Site 08	21	Obliterate Pavement Markings	SF	350		350	-350	0	$6.00	-$2,100.00
	22	F&I Grooved Thermoplastic Pavement Marking Message	SF	16		16	204	220	$60.00	$12,240.00
	23	Paint Epoxy Line 4" Wide	LF	-1269	0	250	-250	0	$15.00	-$3,750.00
								Site 08 Sub Total		**$6,390.00**
Site 09	24	F&I Grooved Thermoplastic Pavement Marking Message	SF	16		16	53	69	$60.00	$3,180.00
	26	Paint Epoxy Line 4" Wide	LF	-320	0	1333	-384	949	$6.00	-$2,304.00
	27	Paint Epoxy Line 16" Wide	LF	9	0	27	2	29	$30.00	$60.00
								Site 09 Sub Total		**$936.00**
Site 10	28	Obliterate Pavement Markings	SF	250		250	-250	0	$6.00	-$1,500.00
	29	F&I Grooved Thermoplastic Pavement Marking Message	SF	32		32	-32	0	$60.00	-$1,920.00
	30	Paint Epoxy Line 24" Wide	LF	-200	0	96	-24	72	$30.00	-$720.00
	31	F&I Methacrylate 24" Wide	LF	143		143	55	198	$75.00	$4,125.00
	32	Paint Epoxy Line 4" Wide	LF	-142	0	1310	-183	1127	$15.00	-$2,745.00
	33	Paint Epoxy Line 6" Wide	LF	88		88	6	94	$20.00	$120.00
	34	Paint Epoxy Line 16" Wide	LF	3	0	48	-25	23	$30.00	-$750.00
								Site 10 Sub Total		**-$3,390.00**
Site 11	35	F&I Methacrylate 24" Wide	LF	808		808	-58	750	$75.00	-$4,350.00

Section	Line No	Item Description	Unit	Orig Cont Qty	Prev C/O Qty	Prev Cont Qty	Curr C/O Qty	Tot Cont Qty	Unit Price ($)	C/O Ext Price ($)
								Site 11 Sub Total		**-$4,350.00**
Site 12	36	F&I Methacrylate 24" Wide	LF	385		385	9	394	$75.00	$675.00
								Site 12 Sub Total		**$675.00**
Site 13	37	Paint Epoxy Line 4" Wide	LF	3612	0	5883	-1002	4881	$3.80	-$3,807.60
	38	Paint Epoxy Message	SF	-118	0	96	-32	64	$30.00	-$960.00
								Site 13 Sub Total		**-$4,767.60**
Site 14	39	F&I Methacrylate 24" Wide	LF	488		488	-30	458	$75.00	-$2,250.00
								Site 14 Sub Total		**-$2,250.00**
Site 15	40	F&I Methacrylate 24" Wide	LF	350		350	-16	334	$75.00	-$1,200.00
								Site 15 Sub Total		**-$1,200.00**
Site 16	41	F&I Methacrylate 24" Wide	LF	540		540	36	576	$75.00	$2,700.00
								Site 16 Sub Total		**$2,700.00**
Site 17	42	F&I Methacrylate 24" Wide	LF	246		246	12	258	$75.00	$900.00
								Site 17 Sub Total		**$900.00**
Site 18	43	Paint Epoxy Line 4" Wide	LF	2941	0	4146	64	4210	$3.80	$243.20
	44	Paint Epoxy Line 8" Wide	LF	-292	0	324	27	351	$6.00	$162.00
	45	Paint Epoxy Line 24" Wide	LF	-218	0	59	-5	54	$30.00	-$150.00
								Site 18 Sub Total		**$255.20**
Site 19	47	Paint Epoxy Line 4" Wide	LF	115	0	1425	-41	1384	$6.00	-$246.00
	48	Paint Epoxy Line 6" Wide	LF	695		695	-695	0	$20.00	-$13,900.00
	49	Paint Epoxy Line 8" Wide	LF	1268	0	1152	759	1911	$6.00	$4,554.00
	50	Paint Epoxy Line 16" Wide	LF	16	0	40	-4	36	$30.00	-$120.00
	51	Paint Epoxy Message	SF	298	0	512	-32	480	$30.00	-$960.00
								Site 19 Sub Total		**-$10,672.00**
Site 20	52	Paint Epoxy Line 4" Wide	LF	8314	0	10148	-565	9583	$3.80	-$2,147.00
	53	Paint Epoxy Line 6" Wide	LF	453		453	23	476	$20.00	$460.00
	54	Paint Epoxy Line 8" Wide	LF	-8	0	925	-290	635	$6.00	-$1,740.00

Section	Line No	Item Description	Unit	Orig Cont Qty	Prev C/O Qty	Prev Cont Qty	Curr C/O Qty	Tot Cont Qty	Unit Price ($)	C/O Ext Price ($)
	55	Paint Epoxy Line 16" Wide	LF	116	0	273	-137	136	$30.00	-$4,110.00
	56	Paint Epoxy Message	SF	298	0	384	96	480	$30.00	$2,880.00
								Site 20 Sub Total		**-$4,657.00**

Summary

Source Of Funding	Utility Funds - Street Lights - 528
Net Amount Change Order # 3 ($)	-$23,913.00
Previous Change Orders ($)	$50,850.00
Original Contract Amount ($)	$534,606.00
Total Contract Amount ($)	$561,543.00

I hereby accept this order both as to work to be performed and prices on which payment shall be based.

APPROVED		APPROVED DATE	
For Contractor	NorthStar Safety Inc	Department Head	T-Lee
Title	Branch Manager	Mayor	
		Attest	

THE CITY OF
Fargo
FAR MORE

225 4th Street North
Fargo, ND 58102
Phone: 701.241.1301
Email feng@FargoND.gov
www.FargoND.gov

18

November 18, 2026

Board of City Commissioners
225 4th Street North
Fargo, ND 58102

Re: Request for a 4-way Stop Controlled Intersection at Elm Street & 21st Avenue

Dear Mayor and City Commissioners:

The Fargo VA Police Department has requested that we change the current traffic control at the intersection of Elm Street and 21st Avenue North intersection from a 2-way stop to a 4-way stop controlled intersection. 21st Avenue North also serves as their Visitor Entrance. I fully agree with making this change. Elm Street is classified in our Transportation Plan as a residential collector street, while 21st Avenue North is classified as a local street. The approach to the VA sees hundreds of visitors daily that may not be familiar with the area, and by making this change, we are improving the safety for those individuals. In addition, there are over a hundred employees at the VA that park west of Elm Street and cross Elm Street on the south side of that intersection where we have it marked as crosswalk. Typically, as the City Traffic Engineer, I have the discretion to use our Stop/Yield Sign Criteria to make this type of change, but in this situation, I want to raise awareness as to why we are making the change, and looking for your support in doing so.

Recommend Motion: Concur with the City of Fargo Traffic Engineer's recommendation to turn the intersection of Elm Street and 21st Avenue North into a 4-way stop controlled intersection, effective November 25.

Sincerely,

Jeremy Gorden, PE, PTOE
Division Engineer – Transportation

REPORT OF ACTION

PUBLIC WORKS PROJECTS EVALUATION COMMITTEE

19

Type: Consent to Construct Agreement

Location: 3064 Thunder Rd S

Date of Hearing: 11/16/2026

Routing	Date
City Commission	11/23/2026
PWPEC File	X
Project File	Matt Jennings

The Committee reviewed the attached correspondence from ROW Manager, Matt Jennings, regarding a Consent to Construction Agreement with McCoy I-29 Properties, LLC to install and maintain their private amenities within the City of Fargo's sanitary sewer easement.

McCoy I-29 Properties, LLC is currently working through the site plan process to begin construction of a show lot on its property located at 3064 Thunder Road South. As part of the proposed development, the property owner desires to utilize an existing sanitary sewer easement to satisfy certain site plan requirements and utilize the easement area as part of their business. The proposed private amenities within the sanitary sewer easement include a storm sewer connection which must pass through the easement to carry storm flows to the nearby pond as well as a portion of their show lot within the easement.

Under the Consent to Construction Agreement, the property owner will be required to honor the existing easement grants which allow the City of Fargo full rights to access the sanitary sewer easement for the purpose of inspecting, maintaining, repairing, replacing, and otherwise accessing the City's sanitary sewer infrastructure as necessary. The property owner acknowledges and accepts the risk associated with placing improvements within the sanitary sewer easement and agrees to replace or repair any improvements located within the easement that are damaged as a result of the City exercising its rights under the easement.

Staff is recommending approval of the Consent to Construction Agreement with McCoy I-29 Properties, LLC.

On a motion by Ben Dow, seconded by Susan Thompson, the Committee voted to recommend approval of the Consent to Construction Agreement with McCoy I-29 Properties, LLC.

RECOMMENDED MOTION

Concur with the recommendations of PWPEC and approve the Consent to Construction Agreement with McCoy I-29 Properties, LLC.

PROJECT FINANCING INFORMATION:

Recommended source of funding for project: N/A

	Yes	No
Developer meets City policy for payment of delinquent specials	N/A	
Agreement for payment of specials required of developer	N/A	
Letter of Credit required (per policy approved 5-28-13)	N/A	

COMMITTEE

	Present	Yes	No	Unanimous
				☑
Josh Boschee, Mayor	☑	☑	☐	
Nicole Crutchfield, Director of Planning	☑	☑	☐	
Gary Lorenz, Fire Chief	☑	☑	☐	
Michael Redlinger, City Administrator	☑	☑	☐	
Ben Dow, Director of Operations	☑	☑	☐	
Tom Knakmuhs, City Engineer	☑	☑	☐	
Susan Thompson, Finance Director	☑	☑	☐	

Tom Knakmuhs, P.E.
City Engineer

ATTEST:

C: Kristi Olson

Engineering Department
225 4th Street North
Fargo, ND 58102
Phone: 701.241.1545 Fax: 701.241.8101
Email feng@FargoND.gov
www.FargoND.gov

Memorandum

To: Members of PWPEC

From: Matthew Jennings, ROW Management

Date: November 10, 2026.

Re: Consent to Construction Agreement - 3064 Thunder Road South

---

Background:

McCoy I-29 Properties, LLC is currently working through the site plan process to begin construction of a show lot on its property located at 3064 Thunder Road South. As part of the proposed development, the property owner desires to utilize an existing sanitary sewer easement to satisfy certain site plan requirements and utilize the easement area as part of their business.

The proposed private amenities within the sanitary sewer easement include a storm sewer connection which must pass through the easement to carry storm flows to the nearby pond as well as a portion of their show lot within the easement.

Under the Consent to Construction Agreement, the property owner will be required to honor the existing easement grants which allow the City of Fargo full rights to access the sanitary sewer easement for the purpose of inspecting, maintaining, repairing, replacing, and otherwise accessing the City's sanitary sewer infrastructure as necessary. The property owner acknowledges and accepts the risk associated with placing improvements within the sanitary sewer easement and agrees to replace or repair any improvements located within the easement that are damaged as a result of the City exercising its rights under the easement.

Recommended Motion:

Recommend approval of the Consent to Construction Agreement allowing McCoy I-29 Properties, LLC to install and maintain their private amenities within the City of Fargo's sanitary sewer easement.

MCJ/klb
Attachment

CONSENT TO CONSTRUCTION AGREEMENT

COME NOW, McCoy I-29 Properties LLC, a North Dakota limited liability company, 3064 Thunder Rd S, ND 58104 ("Owner" or "McCoy"), it successors and assigns, and the City of Fargo, a North Dakota municipal corporation, 225 4th Street North, Fargo, ND, 58102 ("City"), and enter into this Consent to Construction Agreement ("Agreement").

WHEREAS, McCoy is the successor in interest to the parcel located at 3064 Thunder Rd S, ND 58104 (the "Property");

WHEREAS, the Property is subject to a Permanent Easement recorded as Document No. 1296596 on June 8, 2010, granting unto the City a twenty feet (20') sanitary sewer easement described as: A permanent and perpetual easement over, upon, and in the land for the purpose of constructing, operating, maintaining, and repairing a sanitary sewer main (the "Easement Area");

WHEREAS McCoy desires to construct and maintain certain improvements within the Easement Area that are contrary to City's rights granted by the Permanent Easement. The improvements include a gravel lot functioning as an outdoor display area and a storm sewer pipe connection to a private pond (collectively, the "Private Amenities"); and

WHEREAS, the City hereby consents to McCoy constructing, installing, using, and maintaining the Private Amenities within the Easement Area, subject to the following terms and conditions.

1. The legal description of the Owner's property is as follows:
   Sanders Addition, Lot 1, Block 1, LESS that part of Lot 1, Block 1, Sanders Addition, lying northerly of the following described line:
   Beginning at the southeast corner of Lot 2, Block 1, Adams 5th Addition; thence N85°09'32"E, along the easterly extension of the southerly line of said Lot 2, a distance of

75.05 feet to a point of intersection with the easterly line of said Lot 1, said line there terminating.

2. The terms, rights, and conditions provided for by this Agreement do not modify, release, terminate, or otherwise limit any right or interest granted to the City by or under the Permanent Easement. All Private Amenities shall remain subject to the City's rights under the Permanent Easement.

3. McCoy shall be permitted to construct the Private Amenities within the Easement Area, so long as the type, number, and location of the Private Amenities are approved by City in advance of such installation. McCoy shall at all times protect the sanitary sewer and customary appurtenances ("City Infrastructure") and ensure the City Infrastructure is not damaged during construction. McCoy hereby agrees that no construction shall occur within five feet (5') of the City Infrastructure. McCoy shall also follow all North Dakota One Call requirements, N.D. Cent. Code § 49-23-01 prior to any construction activity taking place.

4. McCoy shall be solely responsible for the cost of any repair, removal, relocation, or replacement of City Infrastructure damaged or altered as a result of the construction, installation, maintenance, or removal of the Private Amenities.

5. City shall not be responsible for any damage, replacements, or repairs to the Private Amenities within the Easement Area.

6. To the extent reasonably practicable, City shall provide McCoy with thirty (30) days' written notice of any scheduled or necessary work on City Infrastructure underlying or within the Easement Area, except in the event of an emergency. If the City, in its sole discretion, determines an emergency exists, the City will begin any necessary repairs without notice to McCoy. The City will give notice as soon as reasonably practical after emergency repairs have started.

    a. Upon receipt of notice of scheduled work, McCoy shall, at its sole cost and expense, remove, relocate, or adequately protect the Private Amenities as reasonably necessary to allow the City's work to proceed. City shall fill the excavation site, if necessary, and return the Easement Area to level surface upon completion of City's work. City shall have no responsibility for damage, alteration, or destruction of the Private Amenities. McCoy will be responsible for replacing any Private Amenities at no cost to the City.

    b. City shall have no responsibility for any costs or expenses incurred by McCoy required to engage in the construction, maintenance, repair, replacement, or upkeep of the Private Amenities or to ensure protection of the City Infrastructure located within the Easement Area. McCoy hereby releases the City from any liability

whatsoever related to the damage, destruction, maintenance, replacement, or repair of the Private Amenities located upon the Easement Area.

c. Upon completion of any scheduled or necessary work by the City upon City Infrastructure within the Easement Area, McCoy shall, at its sole cost and expense, promptly reestablish any site plan requirements impacted by such City Infrastructure work. Such reestablishment shall be completed within sixty (60) days following the City's completion of such work, or within such other period as may be reasonably agreed upon in writing by the parties.

7. McCoy shall not be allowed to place any excavation spoils, inventory, supplies, vehicles, construction materials, or other debris upon the Easement Area before, during, or after McCoy's construction is completed.

8. The Private Amenities shall not interfere with the City's use, operation, maintenance, repair, replacement, or improvement of the City Infrastructure within the Easement Area. In the event the City determines that any Private Amenities interferes with or unreasonably impedes the City's exercise of its rights under the Permanent Easement, McCoy shall, at its sole cost and expense, promptly remove, relocate, or modify such Private Amenities as reasonably directed by the City.

9. McCoy hereby recognizes and acknowledges that City's easement located upon the Property afford the City the reasonable right of access to the Easement Area for the customary use and purpose of the reservation, including the rights or ingress and egress to perform maintenance, repairs, and improvements to the City Infrastructure located within the Easement Area. McCoy hereby agrees it will not undertake any actions to impede or impair the City's rights of access.

10. This Agreement will be construed and enforced in accordance with North Dakota law. The parties agree that any dispute arising out of this Agreement shall be venued in State District Court in Cass County, North Dakota, and the parties hereby expressly waive any objection to personal jurisdiction and improper venue.

11. If any court of competent jurisdiction finds any provision or part of this Agreement is invalid, illegal, or unenforceable, that portion will be deemed severed from this Agreement, and all remaining terms and provisions will remain binding and enforceable, and the parties' obligations under this Agreement will remain binding and enforceable.

12. This Agreement constitutes the entire agreement between the parties regarding the matters described herein.

13. Any modifications or amendments of this Agreement must be in writing and signed by both parties.

Remainder of Page Intentionally Left Blank

Dated this 9 day of November 2026.

McCoy I-29 Properties LLC, a North Dakota limited liability company

By: James M C Coy

Its:

STATE OF ND)
) ss.
COUNTY OF Cass)

On this 9 day of November, 2026, before me, a notary public in and for said county and state, personally appeared James D McCoy, the OWNER of McCoy I-29 Properties LLC the person described in and that executed the within and foregoing instrument, and acknowledged to me that said person executed the same.

RAPHAEL NDIMUBANDI
Notary Public
State of North Dakota
My Commission Expires May 22, 2029

Raphael
Notary Public

ND County, Cass
My Commission expires:

(SEAL)

Dated this _____ day of _____ 2026.

City of Fargo,
North Dakota Municipal Corporation

_____
Joshua Boschee, Mayor

ATTEST

_____
Angie Bear
Deputy City Auditor on behalf of City Auditor

STATE OF NORTH DAKOTA)
) ss.
COUNTY OF CASS)

On this _____ day of _____, 2026, before me, a notary public in and for said county and state, personally appeared Joshua Boschee and Angie Bear, to me known to be the Mayor and Deputy Auditor, respectively, of the City of Fargo, Cass County, North Dakota, the North Dakota municipal corporation described in and that executed the within and foregoing instrument, and acknowledged to me that said municipal corporation executed the same.

_____
Notary Public
Cass County, ND
My Commission expires:

(SEAL)

REPORT OF ACTION

PUBLIC WORKS PROJECTS EVALUATION COMMITTEE

20

Type: Driveway Location Acknowledgement

Location: 880 25th Street South

Date of Hearing: 11/16/2026

Routing	Date
City Commission	11/23/2026
PWPEC File	X
Project File	Kevin Gorder

The Committee reviewed a communication from Division Engineer, Kevin Gorder, regarding an Acknowledgement Agreement with Bear Creek Winery regarding their driveway location.

Bear Creek Winery has submitted a building permit application to add on to their property. The property is in the City of Fargo's ET zone, so a permit is needed from the City of Fargo. Engineering's review of the permit shows all conditions have been addressed with the exception of the driveway spacing requirement for 88th Avenue South. 88th Avenue South is a section line road, and by definition, it is or will be an arterial roadway. Driveway spacing for arterial roadway is 600' from the property corner based on the current Land Development Code. The current driveway would be about 500' from the future property corner.

Engineering and Planning have reviewed 88th Avenue South and while it is an arterial by definition, there is potential it will never become one due to the need to cross the Wild Rice River twice. Engineering is willing to approve the building permit but would like a signed acknowledgement from the owner that it may have to move or become a right in/right out in the future. After discussions with the current owner, we have developed an agreement memorializing the waiver of moving the driveway at this time.

On a motion by Michael Redlinger, seconded by Josh Boschee, the Committee voted to recommend approval of the Agreement with Bear Creek Winery.

RECOMMENDED MOTION

Concur with the recommendations of PWPEC and approve the Agreement with Bear Creek Winery.

PROJECT FINANCING INFORMATION:

Recommended source of funding for project: N/A

	Yes	No
Developer meets City policy for payment of delinquent specials	N/A	
Agreement for payment of specials required of developer	N/A	
Letter of Credit required (per policy approved 5-28-13)	N/A	

COMMITTEE	Present	Yes	No	Unanimous
				☑
Josh Boschee, Mayor	☑	☑	☐	
Nicole Crutchfield, Director of Planning	☑	☑	☐	
Gary Lorenz, Fire Chief	☑	☑	☐	
Michael Redlinger, City Administrator	☑	☑	☐	
Ben Dow, Director of Operations	☑	☑	☐	
Tom Knakmuhs, City Engineer	☑	☑	☐	
Susan Thompson, Finance Director	☑	☑	☐	

ATTEST:

T-Kuee

Tom Knakmuhs, P.E.
City Engineer

C: Kristi Olson

THE CITY OF Fargo FAR MORE

Engineering Department
225 4th Street North
Fargo, ND 58102
Phone: 701.241.1545 | Fax: 701.241.8101
Email feng@FargoND.gov
www.FargoND.gov

Memorandum

To: Members of PWPEC

From: Kevin Gorder - Division Engineer

Date: November 12, 2026

Subject: Driveway Location Acknowledgment – Bear Creek Winery 880 25th St S

Background:

Bear Creek Winery has a building permit application to add a sunroom, covered patio area, and a greenhouse. The property is in the City of Fargo's ET zone, so a permit is needed from the City of Fargo. Engineering is reviewing the permit and all conditions related to flood elevations and stormwater have been addressed. The last item left is the existing driveway on 88th Avenue South and spacing requirements. 88th Avenue South is a section line road and by definition it is or will be an arterial roadway. Driveway spacing for an arterial roadway is 600' from the property corner based on the current Land Development Code. The current driveway would be about 500' from the future property corner.

Engineering and Planning have reviewed 88th Avenue South and while it is an arterial by definition, a quick review of this roadway seems to indicate that it may never be an arterial. 88th Avenue would need to connect to University to make it a true arterial and that would require two bridges to cross the Wild Rice River twice. Another option would be to follow the river to make the connection to University. This would require an arterial roadway through Round Hill Development. One wild card is we do not know how the neighbors to the east will develop their property so we cannot with a 100% certainty state it will never be an arterial. In the future, if this roadway was classified as a collector, the driveway would meet spacing and could stay exactly where it is currently located. Engineering is willing to approve this building permit but would like a signed acknowledgement from the owner that it may have to move or become a right in /right out in the future.

After extensive conversations with the current owner, we have developed the attached agreement memorializing the waiver of moving the driveway at this time.

Recommended Action:

Approve the Agreement between the City and Bear Creek Winery.

KOG/klb
Attachment

Acknowledgment of Access Restrictions, Future Dedication, and Waiver of Liability

COME NOW, the parties, Rodney and Susan Ballinger, 8800 25th Street South, Fargo, ND 58104-7809, and the City of Fargo, 225 4th Street North, Fargo, ND 58102, and hereby enter this Acknowledgement of Access Restrictions, Future Dedication, and Waiver of Liability, as follows:

WHEREAS, Rodney and Susan Ballinger ("Owner") is the owner of property located in Cass County, North Dakota, more particularly described as:

> Beginning at the NW corner of the NW ¼ of Section 24, T138N, R49W, Cass County, North Dakota thence easterly along the north line of the NW ¼ a distance of 650 feet; thence southerly along a line parallel with the west ling of said section a distance of 650 feet; thence westerly along a line parallel with the north line of said section a distance of 650 to a point intersecting with the west line of said section; thence northerly along the west line of said section 650 feet to the point of beginning.

The real property is located in Stanley Township and has the mailing address of 8800 25th Street South, Fargo, ND 58104-7809 ("Property").

WHEREAS, the Property is located within the Extraterritorial Jurisdiction of the City of Fargo ("City").

WHEREAS, the Owner is working to construct a sun room, greenhouse, and a covered picnic area ("Additions") on the Property. The Additions will be part of the winery business operated upon the Property ("Proposed Business").

WHEREAS, the Property is located along 25th Street South and 88th Avenue South, which are section line roads and are designated by the City as future arterial roadways.

WHEREAS, the Owner, to allow sufficient access and promote traffic circulation, wishes to leave an existing access/driveway upon the Property that does not comply with the current City of Fargo Land Development Code's roadway access and driveway spacing requirements of Section 20-0702.

WHEREAS, the Owner is seeking authorization from the City to leave this access point/driveway along 88th Avenue South promoting access to the Property for the Proposed Business.

WHEREAS, the City is willing to grant authorization to leave this access point/driveway, under certain terms and conditions as more fully described herein.

WHEREAS, the parties wish to memorialize certain rights and understandings pertaining to the Property.

NOW, THEREFORE, the parties hereby agree and acknowledge as follows:

1. Owner is seeking a building permit from the City for the Additions. Owner hereby acknowledges that they have been informed of, understands, and agrees the Property is located within the Extraterritorial Jurisdiction of the City of Fargo, and is therefore subject to certain conditions and requirements contained within the City of Fargo Land Development Code.

2. Owner acknowledges and understands the City Land Development Code establishes a minimum spacing of 600-feet between access points along a future arterial roadway. Owner further acknowledges and understands that the proposed access/driveway they wish to leave in place along 88th Avenue South, in accordance with the Owner's site plan,

is not in compliance with the 600-feet spacing requirement contained in the City of Fargo Land Development Code.

3. Owner and City acknowledge that the existing driveway was installed between 1999 and 2002 based on aerial images. The Owner did meet with the City in 2001 to discuss the driveway location. Owner's position is that the driveway was placed at the City's direction. The City's decision to allow this driveway at the time of installation at this location was likely based on 88th Avenue South needing two bridges to cross the Wild Rice River or cutting through Round Hill development. Neither the Owner nor City have any written documentation relating to the original installation of the driveway location.

4. The Owner applied for a Conditional Use Permit in 2008 and the City's staff report presented to the Planning Commission states the driveway is not in the correct spot but will be acceptable in the interim. The staff report for the Conditional Use Permit also includes language stating that the Right of Way required on an arterial is 100' on each side of the section line.

5. The Owner applied for a modification to the Conditional Use Permit in 2017. The City's staff report for this modification states the driveway is not in the correct spot but will be acceptable in the interim. The staff report for this modification also includes the 100' Right of Way requirements.

6. Owner acknowledges and understands there may be certain hazards associated with construction contrary to the City of Fargo Land Development Code requirements.

7. The City hereby agrees to allow the access/driveway to remain in place, on an interim basis, under the following terms and conditions:

a. Owner shall be responsible for the construction and maintenance of the proposed access/driveway, including all costs and expenses associated with the construction and maintenance.

b. The access/driveway shall be no wider than 24 feet. Owner must undertake all efforts to maintain existing drainage. If Owner is required to install a culvert or other materials to maintain drainage, Owner shall be responsible for all associated costs and expenses and must seek prior approvals from Stanley Township as to the size and elevations of the culvert.

c. The City shall have the right, in its sole discretion, to require Owner to remove the access/driveway for any reason. If City exercises its discretion, it will provide Owner at least 180 days of notice of removal. Owner shall be solely responsible for the removal, including all associated costs and expenses thereof.

d. The City shall have the right, in its sole discretion, to restrict this driveway to a right in/right out only driveway in the future. If City exercises its discretion, it will provide Owner at least 180 days of notice of the change. Owner shall be solely responsible for any costs to modify access/driveway to restrict movements to right in/right out. If Owner does not make payment for said modifications, the City shall assess the costs to the Property. Owner waives all rights of protest for any assessment related to access/driveway modification.

e. In addition to the City having the right to require removal of the access/driveway, the access/driveway must be removed by Owner upon the occurrence of the following events:

i. If the Proposed Business ceases to exist/operate, then the access/driveway must be removed by Owner within 30 days thereafter.

ii. If any road improvements are to occur along 88th Avenue South necessitating the removal of the access/driveway (as City's sole discretion and determination) the Owner can remove the driveway or the driveway shall be removed with the improvements to 88th Avenue South.

iii. If Owner sells, transfers, or otherwise conveys the Property.

8. The Owner shall be solely responsible for the removal of the access/driveway, including all associated costs and expenses thereof.

9. Owner understands and acknowledges that the City of Fargo Land Development Code requires a dedication of 100' from the section line on all section line arterial roadways.

10. Owner acknowledges and agrees that the issuance of a building permit and approval of a non-compliant access/driveway by the City in no way constitutes approval or permitting for additional improvements or construction upon the Property.

11. By signing this document, the Owner is waiving all potential claims for liability and causes of action against the City for any damages or injuries resulting from the Owner's construction and maintenance of the access/driveway contemplated herein. Owner also hereby agrees to defend and indemnify the City to the extent any claim or cause of action is asserted against the City as a result of the construction and maintenance of the access/driveway, and operation of the Proposed Business, upon the Property as an "AG" Agricultural zoned lot in the Extraterritorial Jurisdiction of the City of Fargo. Any modifications to any proposed use(s) shall be brought through proper City of Fargo Planning Department processes.

12. Owner agrees that this instrument may be recorded against the Property and that this Acknowledgement of Access Restrictions and Waiver of Liability shall run with the land, and shall be binding upon the Owner and all successors in interest.

[The remainder of this page intentionally left blank.]

OWNER:

Rodney Ballinger

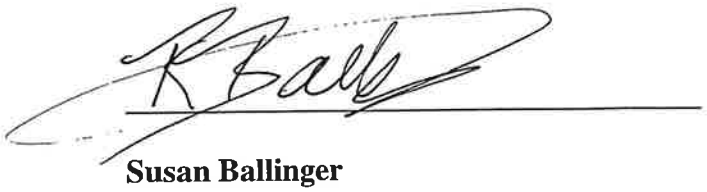

Susan Ballinger



STATE OF NORTH DAKOTA)
) ss.
COUNTY OF CASS)

On this 17th day of November, 2026, before me, a notary public within and for said county and state, personally appeared **Rodney and Susan Ballinger**, to me known to be the person who executed the foregoing instrument, and acknowledged that she executed the same.



Notary Public

(SEAL)

My commission expires: November 3, 2027

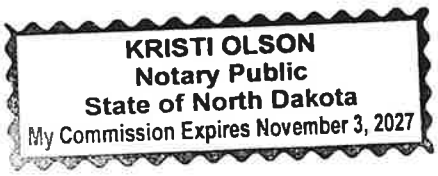

Dated this ___ day of _____, 2026

CITY OF FARGO, NORTH DAKOTA
a municipal corporation

By _____
Joshua Boschee, Mayor

ATTEST:

_____
Angie Bear, Deputy Auditor
on behalf of City Auditor

STATE OF NORTH DAKOTA)
) ss
COUNTY OF CASS)

On this _____ day of _____, 2026, before me, a notary public in and for said county and state, personally appeared **JOSHUA BOSCHEE** and **ANGIE BEAR**, to me known to be the Mayor and Deputy City Auditor, respectively, of the CITY OF FARGO, NORTH DAKOTA, a municipal corporation described in and that executed the within and foregoing instrument, and acknowledged to me that said municipal corporation executed the same.

_____
Notary Public
Cass County, North Dakota

(SEAL)

This document was prepared by:
Kasey McNary
Assistant City Attorney
Serkland Law Firm
10 Roberts Street
Fargo, ND 58102
701-232-8957
kmcnary@serklandlaw.com

The legal description was prepared by City of Fargo Engineering Department

22

FINANCE OFFICE
225 4th Street North
Fargo, ND 58102
Phone: (701) 241-1333
www.FargoND.gov

TO: Board of Commissioners

FROM: Susan Thompson, Director of Finance
Wyatt Papenfuss, Assistant Finance Director

RE: FAHR Staff meeting – Items for Commission Review/Approval

DATE: November 23, 2026

Action Needed: Various Financial Approvals
FAHR endorsed the respective departments' requests for City Commissions approval. Supporting schedules are included.

Approval:

Administration –Memorandum of Understanding (MOU) with the Downtown Community Partnership (DCP)

Budget Adjustment:

Police – Red River Valley SWAT Budget Adjustment

THE CITY OF Fargo
FAR MORE

Administration
Brenda Derrig, PE
225 4th Street North
Fargo, ND 58102
Phone: 701.241.1549
Email: bderrig@FargoND.gov
www.FargoND.gov

November 12, 2026

TO: Board of City Commissioners

FROM: Brenda Derrig, City Administration

RE: Broadway Square Memorandum of Understanding

The City of Fargo and the Downtown Community Partnership (DCP) are affiliated in multiple aspects. First, we have the Agreement for Downtown Business Improvement District Services and Materials. This agreement is for 5 years starting January 1, 2023 and ending December 31, 2027, with the option of five one-year renewals provided the annual BID Assessment renewal is approved by the Board of City Commission. Second is the Recipient Agreement that we do annually for the budget allocation of $150,000. Third is the Broadway Square Memorandum of Understanding (MOU). As the public/private partnership of the Broadway Square developed from the inception, after years of operations adjustments were needed. In 2024 the Park District, Owners, DCP and City met to discuss what the options could look like. This meeting led to the MOU which is evaluated annually to assist with the programming of the Broadway Square.

Attached you will find a Memorandum of Understanding with the Downtown Community partnership and Block 9 Plaza Owner for the operation of the Broadway Square. Last year, this included the Park District but they have since entered into a 10-year Block 9 Plaza Agreement with the DCP and Owner. This MOU is in association with the 2026 and 2027 approved budget.

Recommended Motion:
Approve the Memorandum of Understanding with the Downtown Community Partnership, and Block 9 Plaza LLC.

MEMORANDUM OF UNDERSTANDING

THIS MEMORANDUM OF UNDERSTANDING (the "MOU") is made and entered into this _____ day of _____, 2026, by and between the City of Fargo, North Dakota, a municipal corporation (hereinafter referred to as "Fargo"), , The Downtown Community Partnership, a North Dakota non-profit corporation ("DCP"), and Block 9 Partners, LLC, a North Dakota limited liability company ("Owner").

WHEREAS, the Owner is the owner of property identified on the attached Exhibit "A" including the real estate and any personal property, buildings, or improvements and fixtures located thereon (collectively the "Square"). The Owner funded 100% of the original Block 9 Plaza infrastructure for community use and to support the shared community goal of creating vibrancy in downtown Fargo;

WHEREAS, Owner entered into a Block 9 Plaza Management Agreement on or about August 5, 2025, with the Park District of the City of Fargo ("Park District") and DCP for the management and operation of the Square (the "Management Agreement");

WHERAS, the Square is located in downtown Fargo;

WHEREAS, Fargo has adopted a Downtown InFocus Master Action Plan which includes, in part, a desire for certain event programming for public purposes in downtown Fargo including at the Square;

WHEREAS, Fargo has an interest in event programming at the Square for the residents of Fargo and is therefore willing to provide financial support for programming at the Square, in accordance with the terms herein; and

WHEREAS, the parties desire to memorialize the terms, rights, and responsibilities in writing under this MOU.

NOW, THEREFORE, in consideration of the promises and other good and valuable consideration, the parties agree as follows:

1. Financial Support. Fargo hereby agrees to provide sixty thousand dollars ($60,000) to assist with the operations and programming of the Square for the calendar year 2026 and again for the calendar year 2027.The Park District has already committed through the Management Agreement to provide annual funding of $60,000 for programming and operational support of the DCP as the primary manager of summer programming. In addition to funding from Fargo and Park District, Owner committed to provide annual funding of $60,000 exclusively for capital expenditures for the Square. Under no circumstances will Fargo be responsible for any other persons' obligations to provide the funding described herein or within the Management Agreement. Fargo shall not be responsible to provide more than sixty thousand dollars ($60,000) to DCP for these purposes unless agreed upon in writing approved by the City Commission and signed by the Mayor.

2. Civic Events. The Parties agree that Fargo may utilize the Square for up to four civic events per calendar year during the Term of this MOU. Fargo will not be charged any monies for utilizing the Square for civic events, but may be charged if additional services are requested that require outside

rental of equipment or specialized services beyond the capabilities of the Square. The Parties agree to work together in good-faith to schedule said civic events.

3. Term. This MOU shall commence on January 1, 2026 (the "Effective Date") and shall terminate on December 31, 2027. Fargo makes no promises or representations of any financial contribution except as listed in Paragraph 1. Fargo makes no promises or representations regarding financial contributions for the years after 2027.

4. Entire Agreement. It is expressly agreed that there are no verbal understandings or agreements which in any way change the terms, covenants and conditions set forth herein, and that no modification of this MOU and no waiver of any of its terms and conditions will be effective unless in writing and duly executed by the parties. Nothing herein is intended to and does not supersede the Management Agreement.

5. Governing Law. This MOU has been made and entered into under the laws of the State of North Dakota, and said laws will control its interpretation. Any litigation arising out of this MOU will be venued in State District Court in Cass County, North Dakota, and the parties waive any objection to venue or personal jurisdiction.

6. Rules of Construction. The parties acknowledge that they have had the opportunity to review this MOU, and that they have an equal bargaining position in this transaction. No rule of construction that would cause any ambiguity in any provision to be construed against the drafter of this document will be operative against any party to this MOU.

7. Severability. In the event that any term, part, or provision of this MOU is held to be invalid or unenforceable, all other terms, parts, and provisions will nevertheless continue to be valid and enforceable with the invalid or unenforceable term, part, or provision severed from the remainder of this MOU.

8. Execution in Counterparts; Electronic Signatures. This MOU may be executed in counterparts, each of which together shall be deemed an original, but all of which together shall constitute one and the same instrument. In the event that any signature is delivered by facsimile transmission or by e-mail delivery of a ".pdf" format data file, such signature shall create a valid and binding obligation of the party executing (or on whose behalf such signature is executed) with the same force and effect as if such facsimile or ".pdf" signature page was an original thereof.

9. Effective Date. This MOU becomes effective on the date of the last signature appearing below.

(Signatures appear on the following pages.)

CITY OF FARGO:

Joshua Boschee, Mayor

ATTEST:

Angie Bear, Deputy Auditor
on behalf of the City Auditor

THE DOWNTOWN COMMUNITY PARTNERSHIP

By: _____
Rocky Schneider
Its: Executive Director

BLOCK 9 PARTNERS, LLC

By: _____
F. Scott Neal
Its: President

By: _____
Mike Allmendinger
Its: Secretary

RED RIVER VALLEY S.W.A.T.

MEMORANDUM

To: F.A.H.R. Committee

From: LT Nate Nieman

Date: 11/10/2026

RE: Budget Adjustment

I respectfully submit this formal request for approval to transfer **$2,580.00** in revenue generated from ammunition brass sales through Bernath Recycling into the Red River Valley SWAT General Supplies expense account.

Additionally, I am requesting approval to transfer **any remaining available funds** from the following revenue accounts into the General Supplies account to support team operations for the remainder of the year:

- **216-5016-337.26-00**
- **216-5016-365.10-00**

The SWAT General Supplies account has been significantly depleted due to ongoing operational expenses, equipment maintenance, vehicle repairs, fuel costs, and the replacement of aging equipment. With several outstanding expenses anticipated before the end of the year, these additional funds are necessary to help offset costs and maintain the team's operational readiness.

Transferring the available revenue into the General Supplies account will allow us to continue meeting essential operational needs while minimizing the anticipated budget shortfall for the remainder of the year.

I appreciate your time and consideration of this request. Your continued support is greatly appreciated and helps ensure the Red River Valley SWAT Team remains properly equipped and prepared to serve our communities.

Recommended Motion:

Approve the transfer of funds from Red River Valley SWAT revenue accounts to the General Supplies expense account.

Revenue Accounts:

216-5016-337.26-00–remaining available balance
216-5016-361.99-00–**$2,580**
216-5016-365.10-00– remaining available balance

- **Total budget adjustment: $2,580 plus any remaining available balance in revenue accounts 216-5016-337.26-00 and 216-5016-365.10-00.**

Expense Account:

216-5016-411.61-40 (General Supplies) – **$2,580.00 plus any remaining funds from the other two accounts**

- **Total budget adjustment: $2,580 plus any remaining available balance in revenue accounts 216-5016-337.26-00 and 216-5016-365.10-00.**

BUDGET ADJUSTMENT REQUEST

This form must be completed for all budget adjustments. Please include this form with any requests submitted to FAHR and Commission. If the requested adjustment is a reallocation of budgeted funds within the same department, the request form can be sent directly to Finance. Please email to: Finance@fargond.gov.

*Finance should review this adjustment request form for validity before it is presented to ensure accuracy. Any budget adjustments that increase expenditures **MUST** be approved by City Commission to be entered.*

DEPARTMENT: Red River Valley SWAT

REQUESTED BY: Lt. Nate Nieman **PROJECT NUMBER :**

DATE PREPARED: 11/9/2026

DESCRIPTION OF REQUEST:

NOTE: if relevant, please identify the appropriate fiscal year in the description

I respectfully request approval to transfer $2,580.00 in brass sales revenue and all remaining funds from accounts 216-5016-337.26-00 and 216-5016-365.10-00 to SWAT General Supplies for essential equipment and operational needs.

REVENUE ACCOUNT NUMBER:	CURRENT BUDGET		REQUESTED ADJUSTMENT		NEW BUDGET
216-5016-337.26-00					
216-5016-361.99-00		$	2,580	= $	2,580
216-5016-365.10-00		+		=	
		+		= $	-
	TOTAL REVENUE ADJUSTMENTS:	$	2,580		

EXPENSE ACCOUNT NUMBER:	CURRENT BUDGET		REQUESTED ADJUSTMENT		NEW BUDGET
216-5016-411.61-40		$	2,580	= $	2,580
				= $	-
		+		= $	-
		+		= $	-
		+		= $	-
		+		= $	-
		+		= $	-
	TOTAL EXPENSE ADJUSTMENTS:	$	2,580		

PLEASE NOTE: Budget Adjustments that increase expenditures MUST be approved by Finance & Commission.

MONTHLY ALLOCATION (if not evenly over the remaining months of the year)

Jan	Feb	Mar	Apr	May	June

Jul	Aug	Sep	Oct	Nov	Dec

FINANCE DEPT USE ONLY:

FAHR REVIEWED ON: _____

COMMISSION APPROVED ON: _____

ENTERED BY FINANCE: ***Date:*** _____

By: _____

BA# _____

23

City of Fargo Staff Report			
Title:	The Pines at the District Eighth Addition	**Date:**	09-29-2026 11-18-2026
Location:	5401 44th Street South	**Staff Contact:**	Chelsea Levorsen, Planner
Legal Description:	Lot 1, Block 8, The Pines at the District Addition		
Owner(s)/Applicant:	Rhodium 7, LLC	**Engineer:**	Houston Engineering
Entitlements Requested:	**Minor Subdivision** (Plat of **The Pines at the District Eighth Addition,** a replat of Lot 1, Block 8, The Pines at the District Addition, to the City of Fargo, Cass County, North Dakota)		
Status:	City Commission Consent Agenda: November 23, 2026		

Existing		**Proposed**
Land Use: Undeveloped		**Land Use:** Medical Office
Zoning: LC, Limited Commercial w/ C-O (4688)		**Zoning:** No Change
Uses Allowed: colleges, community service, daycare centers of unlimited size, health care facilities, parks and open space, religious institutions, safety services, basic utilities, offices, ~~off premise advertising signs~~, commercial parking, retail sales and service, self-service storage, ~~vehicle repair~~, limited vehicle service, and certain telecommunications facilities. (C-O's restrict land uses noted above)		**Uses Allowed:** no change, C-O will carry through
Maximum Building Coverage: 55%		**Maximum Building Coverage:** No Change

Proposal:

The applicant requests one entitlement:

1. A minor subdivision, entitled **The Pines at the District Eighth Addition,** a replat of Lot 1, Block 8, The Pines at the District Addition, to the City of Fargo, Cass County, North Dakota

This project was reviewed by the City's Planning and Development, Engineering, Public Works, and Fire Departments ("staff"), whose comments are included in this report.

Surrounding Land Uses and Zoning Districts:

- North: GC, General Commercial with C-O 4688, Undeveloped
- East: MR-3, Multi-Dwelling Residential, Undeveloped
- South: MR-3, Multi-Dwelling Residential with C-O 5455, Undeveloped
- West: AG, Agriculture, Unplatted, Fargo's Extra Territorial Jurisdiction

Area Plans:

Fargo Growth Plan 2024 designates the subject property as a "Urban Neighborhood" place type, The proposed land use (medical office) and the existing zoning of LC, Limited Commercial are both consistent with the Growth Plan place type designation.

Context:

Schools: The subject property is located within the Fargo School District, specifically within the Kennedy Elementary, Carl Ben Eielson Middle and South High schools.

(continue on next page)

Parks: The subject property is located approximately 3/4th of a mile from the Fargo Parks Sports Complex, located at 6100 38th Street South. The facility provides 45+ community events per year. Indoor amenities include; eight basketball courts, one full sized turf field, two sheets of ice, six pickleball courts, an elevated walking track, six multi-purpose rooms, four party rooms, and three community rooms.

Additionally, The Pines Park, located at 5371 42nd Street South, is located approximately ½ mile from the subject property. Park amenities include; a playground, grill, picnic tables, recreational trails, and a shelter.

Pedestrian / Bicycle: The subject property is located adjacent to 45th Street South, which provides a shared-use path that connects to the metro area bikeway system.

Neighborhood: The subject property is included in The District Neighborhood.

MATBUS Route: MATBUS route 18 has a stop on the North side of the 52nd Avenue Walmart, just over a mile from the subject property. MATBUS route 18 provides service to Downtown, area shelters and hospitals, Hornbacher's grocery store, and Microsoft.

Staff Analysis:

MINOR SUBDIVISION

This subdivision will replat one 6.108-acre lot into two lots, entitled **The Pines at the District Eighth Addition.** The applicant has stated that plans for the proposed Lot 2 include development of a medical/orthodontic office. There are currently no plans for the proposed Lot 1. The applicant will be required to submit for a new construction building permit prior to construction.

An updated amenities plan will be required. This plat will establish negative access easements along all of 45th Street South, along 225' of 54th Avenue South, and 130' of 56th Avenue South. Negative access easement will prohibit vehicular access to the site.

ZONING

The subject property is zoned LC, Limited Commercial with a conditional overlay. The Conditional Overlay will carry through with this subdivision. The Conditional Overlay requires higher design standards, separate vehicle and pedestrian circulation, and restricts some land uses.

Minor Subdivision

The LDC stipulates that the following criteria are met before a minor plat can be approved:

1. **Section 20-0907.B.3 of the LDC stipulates that the Planning Commission recommend approval or denial of the application, based on whether it complies with the adopted Area Plan, the standards of Article 20-06 and all other applicable requirements of the Land Development Code. Section 20-0907.B.4 of the LDC further stipulates that a Minor Subdivision Plat shall not be approved unless it is located in a zoning district that allows the proposed development and complies with the adopted Area Plan, the standards of Article 20-06 and all other applicable requirements of the Land Development Code.**
   The proposed development is a permitted use within the LC, Limited Commercial zoning district. This zoning is consistent with the "Urban Neighborhood" place type of the Fargo Growth Plan 2024. In accordance with Section 20-0901.F of the LDC, notices of the proposed plat have been sent out to property owners within 300 feet of the subject property. To date, Planning staff have received one inquiry regarding the subject property. No objection or concerns were noted. The project has been reviewed by the city's Planning, Engineering, Public Works, Inspections, and Fire Departments.
   (Criteria Satisfied)

(continue on next page)

2. **Section 20-0907.C.4.f of the LDC stipulates that in taking action on a Final Plat, the Board of City Commissioners shall specify the terms for securing installation of public improvements to serve the subdivision.**
   While this section of the LDC specifically addresses only major subdivision plats, staff believes it is important to note that any improvements associated with the project (both existing and proposed) are subject to special assessments. Special assessments associated with the costs of the public infrastructure improvements are proposed to be spread by the front footage basis and storm sewer by the square footage basis as is typical with the City of Fargo assessment principles. Staff has determined that an amenities plan is not required. **(Criteria Satisfied)**

Staff Recommendation:

Suggested Motion: "To accept the findings and recommendations of the Planning Commission and staff and move to approve the proposed plat of **The Pines at the District Eighth Addition**, as outlined in the staff report, as the proposal complies with the Fargo Growth Plan 2024, Standards of Article 20-06, Section 20-0907.B. and C and Section 20-0906. F (1-4) of the LDC, and all other applicable requirements of the LDC."

Planning Commission Recommendation: October 6th, 2026

At the October 6th, 2026 Planning Commission hearing, that Commission, by a vote of 8-0 with three Commissioners absent, moved to accept the findings and recommendations of staff and move to recommend approval to the City Commission of the plat of **The Pines at the District Eighth Addition**, as outlined in the staff report, as the proposal complies with the Fargo Growth Plan 2024, Standards of Article 20-06, Section 20-0907.B. and C and Section 20-0906. F (1-4) of the LDC, and all other applicable requirements of the LDC."

Attachments:

1. Zoning map
2. Location map
3. Preliminary plat

Minor Subdivision

The Pines at the District Eighth Addition

5401 44th Street South

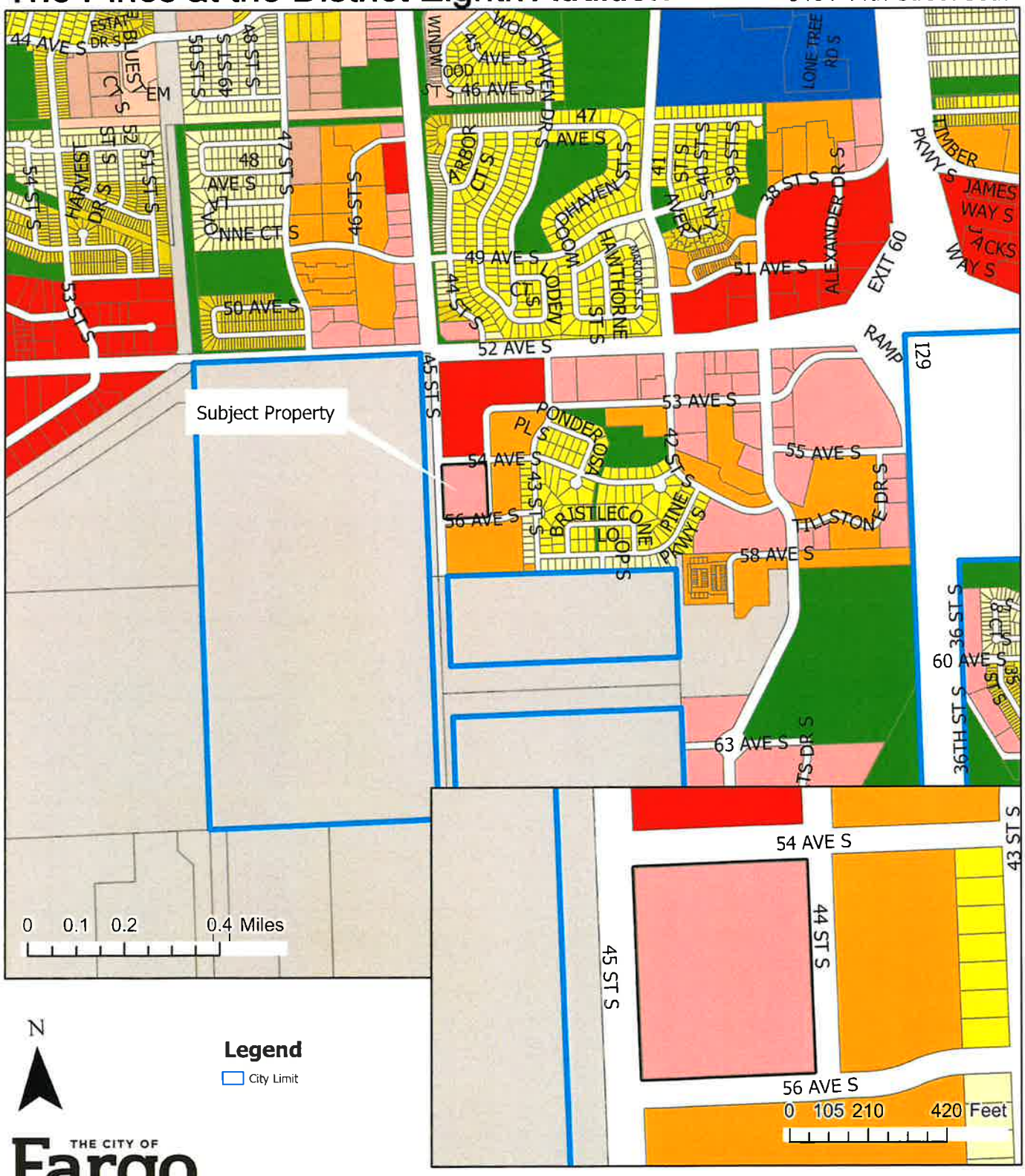

Fargo Planning Commission
October 6, 2026

Minor Subdivision

The Pines at the District Eighth Addition

5401 44th Street South

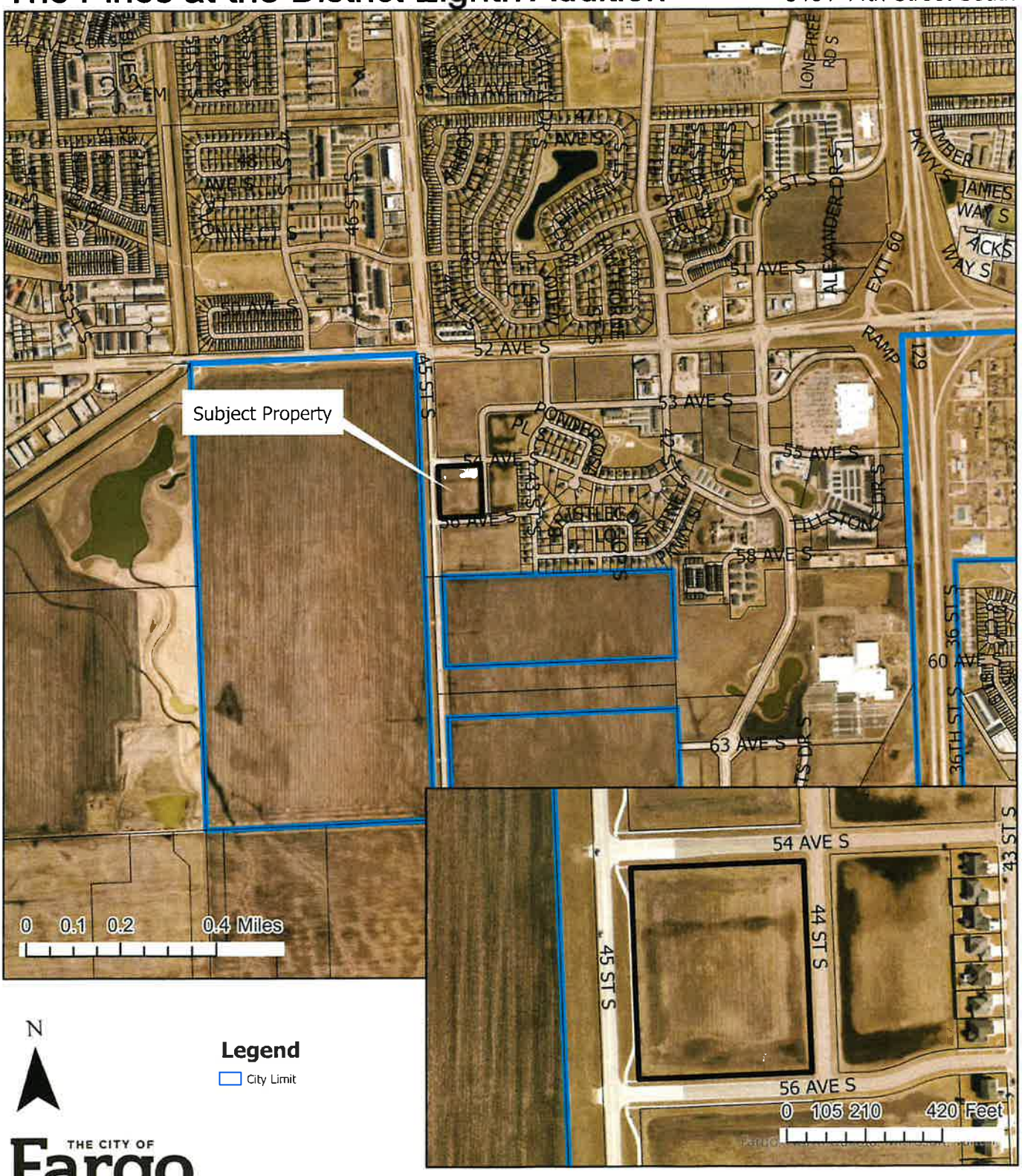

N

Legend

City Limit

THE CITY OF Fargo FAR MORE

Fargo Planning Commission
October 6, 2026

THE PINES AT THE DISTRICT EIGHTH ADDITION

A MINOR SUBDIVISION
BEING A REPLAT OF LOT 1, BLOCK 8, THE PINES AT THE DISTRICT ADDITION
TO THE CITY OF FARGO,
CASS COUNTY, NORTH DAKOTA

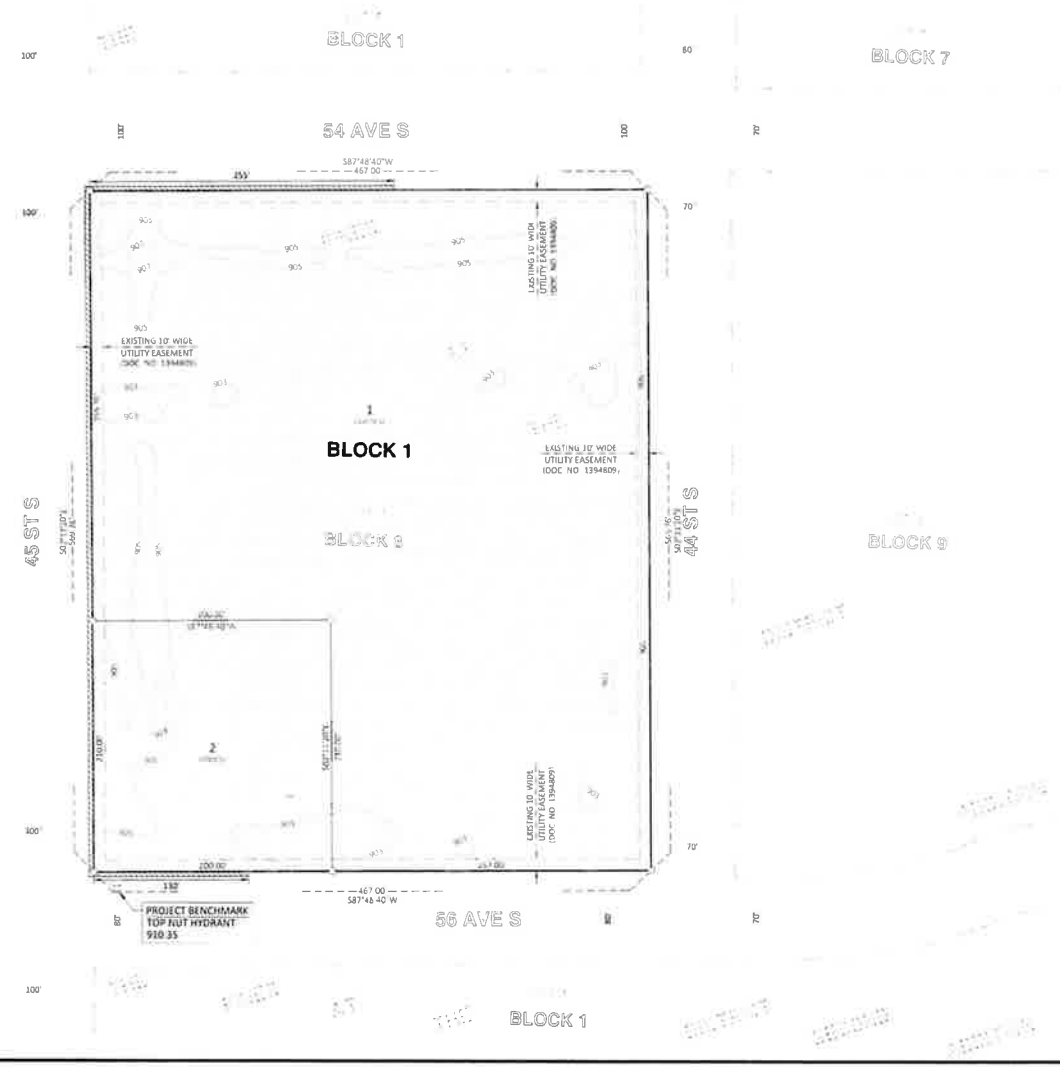

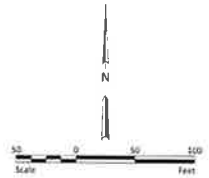

LEGEND

IRON MONUMENT FOUND	●
1/2" I.D. PIPE SET	○
MEASURED BEARING	N00°00'00"E
PLAT BEARING	(N00°00'00"E)
MEASURED DISTANCE	100.00'
PLAT DISTANCE	(100.00')
PLAT BOUNDARY	
NEW LOT LINE	
NEW UTILITY EASEMENT	
EXISTING LOT LINE	
EXISTING UTILITY EASEMENT	
ELEVATION CONTOUR (NAVD 1988)	907
NEW NEGATIVE ACCESS EASEMENT	
AREA WITHIN ZONE AE : FEMA 100-YEAR FLOODPLAIN	

BEARINGS SHOWN ARE BASED ON THE CITY OF FARGO GROUND COORDINATE SYSTEM, DECEMBER 1992

NOTES

1. NEGATIVE ACCESS EASEMENT, AS NOTED ON THIS PLAT, IS AN EASEMENT DEDICATED AS PART OF THE RIGHT-OF-WAY DEDICATION WHICH EASEMENT DENIES DIRECT VEHICULAR ACCESS TO A STREET OR PUBLIC WAY FROM THE LOT OR LOTS ADJACENT TO SUCH STREET OR WAY. THE NEGATIVE ACCESS EASEMENT IS NOT A STRIP OF LAND OF ANY CERTAIN WIDTH, BUT IS A LINE COTERMINOUS WITH THE BOUNDARY OF THE ADJACENT LOT OR LOTS.
2. A PORTION OF THE PROPERTY IS SITUATED IN ZONE AE (100-YEAR FLOODPLAIN) AS DEPICTED ON FEMA FIRM PANEL 38017C0785G DATED JAN. 16, 2015
3. BASE FLOOD ELEVATION = 905.7' (NAVD 1988)
4. AREAS WITHIN FEMA ZONE AE ARE ONLY DEPICTED WITHIN THE BOUNDARY OF THIS PLAT
5. ELEVATION CONTOURS ARE ONLY SHOWN WITHIN FEMA ZONE AE

HOUSTON ENGINEERING, INC

Project No. 7489-0146

THE PINES AT THE DISTRICT EIGHTH ADDITION

A MINOR SUBDIVISION
BEING A REPLAT OF LOT 1, BLOCK 8, THE PINES AT THE DISTRICT ADDITION
TO THE CITY OF FARGO,
CASS COUNTY, NORTH DAKOTA

OWNER'S CERTIFICATE AND DEDICATION:

KNOW ALL PERSONS BY THESE PRESENTS: That Rhodium 7, LLC, a North Dakota limited liability company, is the owner and proprietor of the following described tract of land:

Lot 1, Block 8, The Pines at The District Addition to the City of Fargo, Cass County, North Dakota

Said tract contains 6.108 acres, more or less.

And that said party has caused the above described tract of land to be surveyed and replatted as **THE PINES AT THE DISTRICT EIGHTH ADDITION** to the City of Fargo, Cass County, North Dakota, and do hereby dedicate to the public, for public use, the negative access easement as shown on the plat.

OWNER

Rhodium 7, LLC
By: Syndica, LLP, Its Manager

By: _____
Austin J. Morris, Partner

State of North Dakota)
) ss.
County of Cass)

The foregoing instrument was acknowledged before me this 23rd day of September, 20 26, by Austin J. Morris, a Partner of Syndica, LLP, a North Dakota limited liability partnership, Manager of Rhodium 7, LLC, a North Dakota limited liability company, on behalf of the limited liability partnership.

Notary Public: _____

JESSICA L'HEUREUX
Notary Public
State of North Dakota
My Commission Expires July 1, 2030

SURVEYOR'S CERTIFICATE AND ACKNOWLEDGEMENT:

I, James A. Schleman, Professional Land Surveyor under the laws of the State of North Dakota, do hereby certify that this plat is a true and correct representation of the survey of said subdivision, that the monuments for the guidance of future surveys have been located or placed in the ground as shown.

Dated this 18th day of SEPTEMBER, 20 26.

_____
James A. Schleman, Professional Land Surveyor No. 6066

JAMES A. SCHLEMAN
LS-6066
DATE 9/18/26
PROFESSIONAL LAND SURVEYOR
NORTH DAKOTA

State of North Dakota)
) ss
County of Cass)

On this 18th day of SEPTEMBER, 2026 before me personally appeared James A. Schleman, Professional Land Surveyor, known to me to be the person who is described in and who executed the within instrument and acknowledged to me that he executed the same as his free act and deed.

Notary Public: _____

CITY ENGINEER'S APPROVAL:

Approved by the Fargo City Engineer this _____ day of _____, 20____

_____
Tom Knakmuhs, PE, City Engineer

State of North Dakota)
) ss
County of Cass)

On this _____ day of _____, 20_____ before me personally appeared Tom Knakmuhs, PE, Fargo City Engineer, known to me to be the person who is described in and who executed the within instrument and acknowledged to me that he executed the same as Fargo City Engineer.

Notary Public: _____

FARGO PLANNING COMMISSION APPROVAL

Approved by the City of Fargo Planning Commission this 6th day of October, 20 26.

_____
Arthur S. Rosenberg, Chair
Fargo Planning Commission

State of North Dakota)
) ss
County of Cass)

On this 6th day of October, 2026, before me personally appeared Arthur S. Rosenberg, Chair, Fargo Planning Commission, known to me to be the person who is described in and who executed the within instrument and acknowledged to me that he executed the same on behalf of the Fargo Planning Commission.

Notary Public: Miranda Wolf

MIRANDA WOLF
Notary Public
State of North Dakota
My Commission Expires Dec 17, 2031

FARGO CITY COMMISSION APPROVAL:

Approved by the Board of City Commissioners and ordered filed this _____ day of _____, 20____.

_____
Joshua A. Boschee, Mayor

Attest: _____
Angie Bear, Deputy Auditor on behalf of City Auditor

State of North Dakota)
) ss
County of Cass)

On this _____ day of _____, 20____, before me, a notary public within and for said county and state, personally appeared Joshua A. Boschee and Angie Bear, known to me to be the persons described in and who executed the foregoing instrument and acknowledged that they executed the same as their free act and deed on behalf of the City of Fargo.

Notary Public _____

HOUSTON ENGINEERING, INC.

Project No. 7489-0146

H:\SW\7400\7489\7489_0146\CAD\Plat\7489-0146 The Pines at the District Eighth Addition.dwg

THE CITY OF Fargo FAR MORE

WATER RECLAMATION

REGIONAL WATER RECLAMATION FACILITY
3400 North Broadway
Fargo, ND 58102
Phone: 701.241.1454 | Fax: 701.241.8159
FargoND.gov

24

November 18, 2025
Honorable Board of City Commissioners
City of Fargo

Commissioners and Mayor,
The following is in Reference to City Auditors Ad ITB27010. Bid opening was conducted on November 4, 2026. Please find attached the bid tabulation sheet listing all bids received for supplying chemicals to the Water Reclamation Utility for 2027. Listed below is staff recommendations for each chemical, based on recent bids. Prices are effective on Jan. 1, 2027.

item #	Product Name	Vendor	Price $ Per PO	Unit
23	Azone 15/ Sodium Hypochlorite	Hawkins	3.65	/gallon
24	Pretreat Plus Antiscalant	Hawkins	24.43	/gallon
25	Caustic Soda, 30%	Hawkins	5.08	/gallon
26	Caustic Soda 50%	Hawkins	0.53	/pound
27	Ferric Chloride, 35%	Hawkins	0.67	/pound
28	Ammonium Hydroxide, 19%	Hawkins	0.71	/pound
29	Sulfuric Acid, 40%	Hawkins	5.55	/pound
30	Citric Acid, 50%	Hawkins	1.21	/pound
31	Odor Control/Hydrogen Sulfide	Electric Pump	130.00	/FT³ media
32	Odor Control/Broad Spectrum	Electric Pump	110.00	/FT³ media
33	Calcium Nitrate / Bulk	Hawkins	3.30	/gallon
34	Calcium Nitrate / Tote	Hawkins	5.02	/gallon
35	Hydrogen Peroxide 34% / Bulk	US Peroxide	5.00	/gallon
36	Hydrogen Peroxide 34% / Tote	US Peroxide	5.57	/gallon
37	Cationic Flocculant (polymer)	Sioux Valley Environmental	1.70	/ pound
38	Muriatic Acid 15%	Hawkins	6.75	/ gallon
39	Azone 15/Sodium Hypochlorite / tote	Hawkins	3.45	/ gallon

Recommendation;
Water Reclamation Staff recommendation to City Commission is to award the 2027 chemical bids to the aforementioned vendors and their respective chemicals.

Respectfully,

Mark M. Miller

Mark M. Miller
Utility Superintendent
Water Reclamation Utility

THE CITY OF Fargo FAR MORE | SOLID WASTE

DIVISION OF SOLID WASTE
2301 8th Avenue North
Fargo, North Dakota 58102
Office: 701.241.1449 | Fax: 701.241.8109
FargoND.gov

25

November 18, 2026

Honorable Board of City Commissioners
City of Fargo
225 4rd Street North
Fargo, ND 58102

RE: Temporary Construction Easement with The Nordick Group, Inc. for project SW 26-01 Landfill Gas Pipeline Realignment

Dear Commissioners:

Attached is a temporary construction easement agreement between the City of Fargo and The Nordick Group, Inc. to accommodate realignment of the Landfill Gas Pipeline following the 2026 sale of land located in West Fargo. As part of the sale agreement a portion of the Landfill Gas Pipeline was requested to be relocated towards the existing Right-of-Way. This easement is needed to complete the boring underneath 9th St NE in West Fargo as shown.

There is no cost associated with this easement request.

SUGGESTED MOTION:

Approve the Temporary Construction Easement with The Nordick Group, Inc. for project SW 26-01.

Respectfully submitted,

Scott Olson, PE
Solid Waste Utility Director

EASEMENT
(Temporary Construction Easement)

KNOW ALL MEN BY THESE PRESENTS that **The Nordick Group, Inc.**, a North Dakota Limited Liability Company, whose address is 675 12th Ave NE, West Fargo, ND 58078, hereinafter referred to as "Grantor", for and in consideration of the sum of One and no/100 Dollars ($1.00) and other valuable consideration, to it in hand paid the receipt whereof is hereby acknowledged, **HEREBY GRANTS UNTO THE CITY OF FARGO, CASS COUNTY, NORTH DAKOTA,** a municipal corporation, its successors and assigns, hereinafter referred to as "Grantee", temporary construction easements under, over, upon and in the lands hereinafter described for the purpose of storage of materials and job site layout for construction, together with the customary appurtenances, said tract being described as follows:

That part of Lot 1, Block 2 of Midland 3rd Addition to the City of West Fargo, part of the Northeast Quarter of Section 5, Township 139 North, Range 49 West of the Fifth Principal Meridian, in the City of West Fargo, Cass County, North Dakota, described as follows:

Commencing at the northeast corner of said Northeast Quarter; thence South 02°59'15" East, along the easterly line of said Northeast Quarter, for a distance of 894.50 feet; thence South 87°23'35" West for a distance of 60.00 feet to the Northeast corner of said Lot 1 and the True Point of Beginning; thence South 02°59'15" East, along the easterly line of said Lot 1 for a distance of 40.00 feet; thence South 87°23'35" West for a distance of 150.00 feet; thence North 02°59'15" West for a distance of 40.00 feet to a point of intersection with the northerly line of said Lot 1; thence North 87°23'35" East along the northerly line

of said Lot 1, for a distance of 150.00 feet to the Northeast corner of said Lot 1 and the True Point of Beginning.

Said tract contains 0.14 acres, more or less, and is subject to easements as may be of record.

The easement area is pictorially represented on the attached Exhibit A.

Grantor, its successors and assigns, hereby covenants to and with Grantee that Grantee's officers, contractors, agents and employees may at any and all times when necessary or convenient to do so, go over and upon said above-described parcel of land and perform any and all acts necessary or convenient to carry into effect the purpose for which the grant is made.

Grantor, its successors and assigns, further agree that they will not disturb, injure, molest or in any manner interfere with said parcels to be used for storage of materials and job site layout during the construction phase of said project, and Grantor expressly warrants and states that no buildings, trees, shrubs or other obstacles of any kind shall be placed or located upon the parcels so as to interfere in any manner with the said parcels during the construction phase. Grantee, at its own expense, shall leave the premises in as good condition as they were prior to the time construction activities began.

This Easement shall begin on the beginning of construction until the completion of construction.

Exhibit A

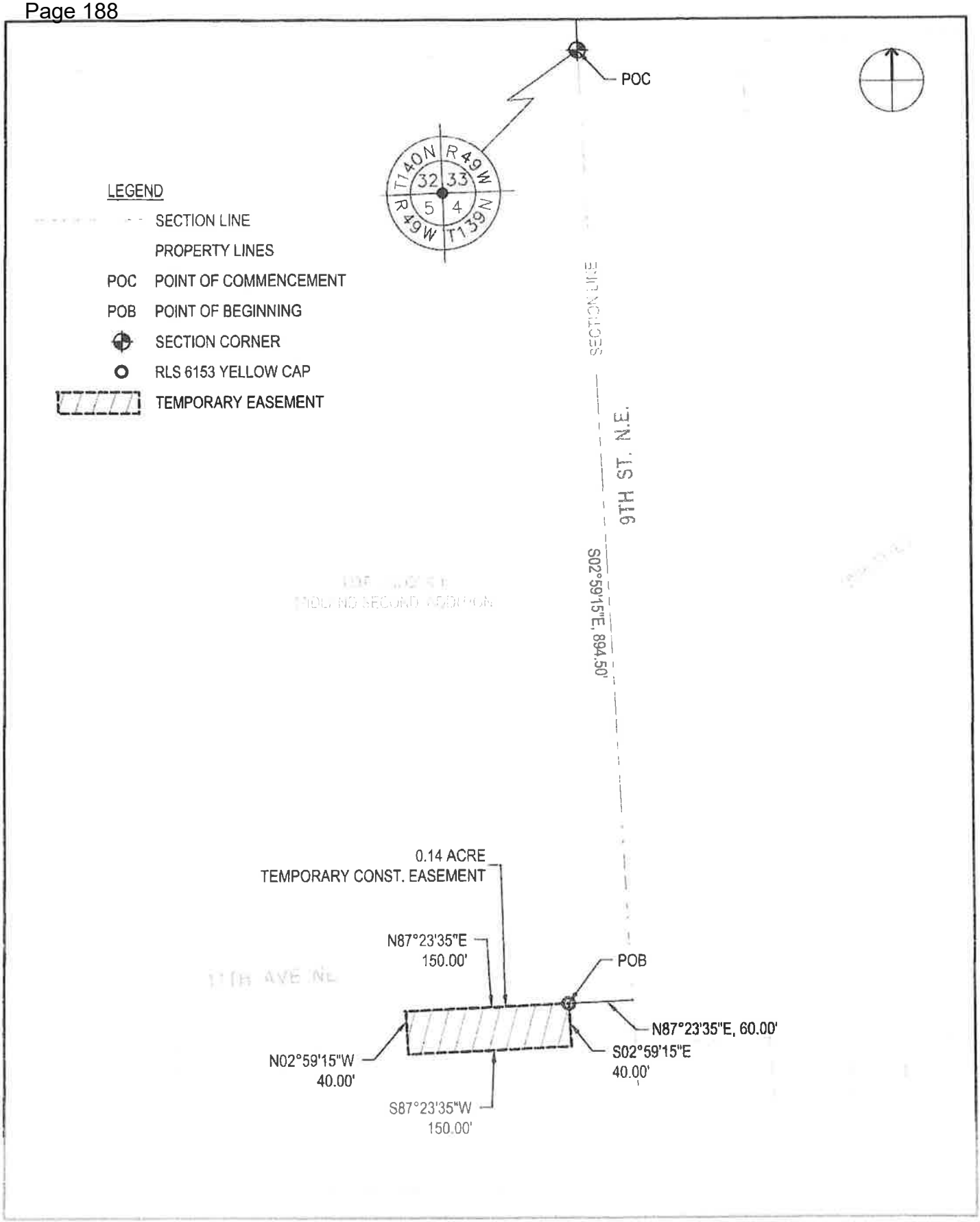

HDR

FARGO, ND 58102
(701) 353-6100

TEMPORARY CONSTRUCTION EASEMENT

NORDICK GROUP
~~9TH STREET NE & 11TH AVE NE~~
WEST FARGO, ND

SHEET
EXHIBIT A

IN WITNESS WHEREOF, Grantor has set his hand and caused this instrument to be executed this 12 day of AUGUST, 2026.

GRANTOR:

The Nordick Group, Inc.

By: DOUGLAS GEESLIN
Its: PRESIDENT

STATE OF NORTH DAKOTA)
)
COUNTY OF CASS)

On this 12TH day of AUGUST, 2026, before me a notary public in and for said county and state, personally appeared DOUGLAS GEESLIN, known to me to be the PRESIDENT of the ~~City of Fargo ND~~ THE NORDICK GROUP, and executed the within and foregoing instrument, and acknowledged the same.

(SEAL)

Notary Public
My Commission Expires:

BENAE FREEBERG
Notary Public
State of North Dakota
My Commission Expires July 13, 2030

GRANTEE:

City of Fargo, North Dakota, a North Dakota Municipal Corporation

_____

Josh Boschee, Mayor

ATTEST:

_____

Angie Bear, Deputy City Auditor on Behalf of City Auditor

STATE OF NORTH DAKOTA)
)
COUNTY OF CASS)

On this _____ day of _____, 2026, before me a notary public in and for said county and state, personally appeared_____, known to me to be the Mayor and Deputy City Auditor, respectively, of the city of Fargo, the Grantee described in and that executed the within and foregoing instrument, and acknowledged to me that said Grantee executed the same.

_____

Notary Public
My Commission Expires:

The legal description was prepared by:
Brian Jensen. PLS
Professional Land Surveyor
NO. LS-6651

This document prepared by:
Kasey D. McNary (ND# 06590)

Assistant City Attorney
SERKLAND LAW FIRM
10 Roberts Street Nor
Fargo, ND 58102
(701) 232-8957



STATE COUNTY MAP

GOVERNING SPECIFICATIONS	DATE PUBLISHED
CITY OF WEST FARGO ENGINEERING SPECIFICATIONS	02/20/25
SPECIAL INSTRUCTION TO BIDDERS	MARCH 2026



Contract Drawings For

LANDFILL GAS PIPELINE REALIGNMENT

REALIGNMENT OF EXISTING LFG PIPELINE TO ACCOMMODATE FUTURE UTILITIES

HDR Project No.
10447503

WEST FARGO, ND
MARCH 2026

INDEX OF DRAWINGS

G000	COVER SHEET	
G001	GENERAL CIVIL LEGEND & NOTES	
G002	TEMPORARY CONSTRUCTION EASEMENTS	
C100	EXISTING CONDITIONS	
C101	SITE LAYOUT PLAN	
C102	SITE DEMOLITION PLAN	
C103	SITE EROSION CONTROL PLAN	
C104	9TH STREET NE LFG PIPELINE REALIGNMENT PLAN & PROFILE	
C105	11TH AVE NE LFG PIPELINE REALIGNMENT PLAN & PROFILE	
C106	LFG RE-ALIGNMENT PLAN & PROFILE	(STA 30+00 - 32+50)
C107	LFG RE-ALIGNMENT PLAN & PROFILE	(STA 32+50 - 35+50)
C108	LFG RE-ALIGNMENT PLAN & PROFILE	(STA 35+50 - 37+00)
C109	CIVIL DETAILS	
C110	CIVIL DETAILS	
C111	EROSION CONTROL DETAILS	
TR101	TRAFFIC CONTROL PLAN	

UTILITY/CIVIL LINE SYMBOLOGY

- R/W — RIGHT-OF-WAY
- PROPERTY LINES
- PROPERTY LINES (PLATTING)
- SECTION LINE
- EXISTING OVERHEAD POWER
- EXISTING COMMUNICATION
- EXISTING UNDERGROUND ELECTRIC
- EXISTING FIBER OPTIC
- EXISTING WATER LINE
- EXISTING SANITARY SEWER
- EXISTING STORM SEWER
- EXISTING GAS
- EXISTING LFG PIPELINE (DEMO)
- PROPOSED LFG PIPELINE (LFG)
- SS — FUTURE SANITARY SEWER
- STS — FUTURE STORM SEWER
- W — FUTURE WATER LINE
- EXISTING POWER POLE
- EXISTING LIGHT POLE
- EXISTING FIRE HYDRANT
- EXISTING WATER VALVE
- FUTURE FIRE HYDRANT
- FUTURE WATER TEE
- FUTURE WATER VALVE
- CONTOUR (MAJOR)
- CONTOUR (MINOR)
- 900 — CONTOUR (MAJOR)
- CONTOUR (MAJOR)
- FUTURE PCC - CONCRETE SURFACING
- FUTURE PCC CURB AND GUTTER

GENERAL NOTES

1. THESE PLANS ARE GENERATED FROM THE NORTH DAKOTA DEPARTMENT OF TRANSPORTATION PROJECT NUMBER TMA-S-[illegible]-PRO(515) PCN 21537.
2. DRAWING FILES WERE PROVIDED BY HOUSTON ENGINEERING INC. NOT ALL EXISTING AND FUTURE UTILITIES ARE SHOWN. REFER TO CONSULTING DRAWINGS.
3. THIS IS A STANDARD CIVIL SYMBOLOGY SHEET. ALL SYMBOLS ARE NOT NECESSARILY USED ON THIS PROJECT.
4. SCREENING OR SHADING OF WORK IS USED TO INDICATE EXISTING COMPONENTS OR TO DE-EMPHASIZE IMPROVEMENTS TO HIGHLIGHT SELECTED TRADE WORK. REFER TO CONTEXT OF EACH SHEET FOR USAGE.

HDR ENGINEERING, INC.
[illegible]
FARGO, ND 58102
(701) 893-4700

ISSUE	DATE	DESCRIPTION
-	03/26/2026	ISSUED FOR BIDDING

PROJECT MANAGER: RANDY HANSEN
PROJECT NUMBER: [illegible]

PRELIMINARY
NOT FOR CONSTRUCTION
OR RECORDING

LANDFILL GAS PIPELINE REALIGNMENT
REALIGNMENT OF EXISTING LFG PIPELINE
TO ACCOMMODATE NEW UTILITIES

9TH STREET NE & 11TH AVE NE
WEST FARGO, ND

GENERAL CIVIL LEGEND & NOTES

FILE NAME: G001.DWG
SCALE: -

SHEET: **G001**

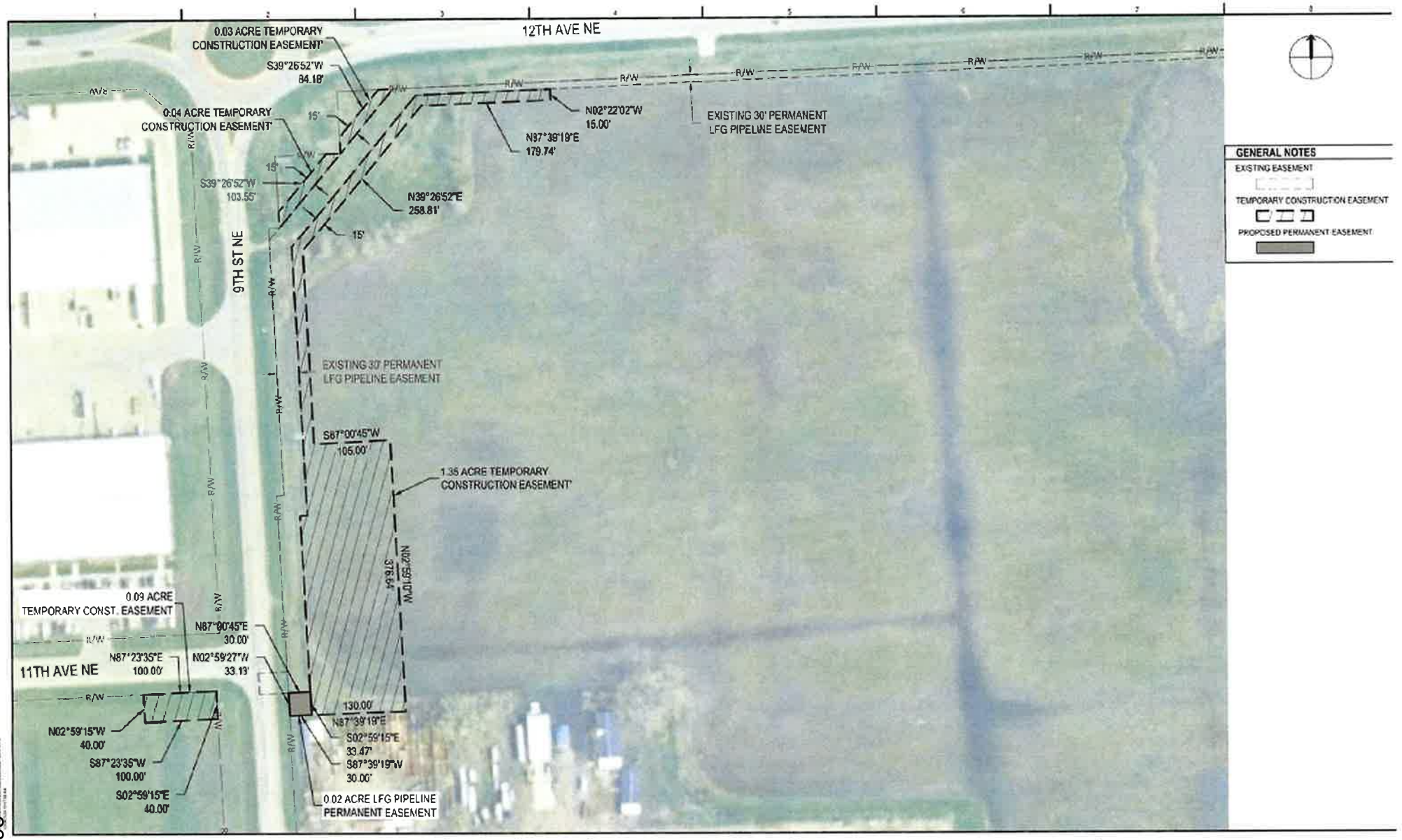

ISSUE	DATE	DESCRIPTION
1	07/15/2019	ISSUED FOR BIDDING

PROJECT MANAGER: NANCY HANSON

PROJECT NUMBER:

PRELIMINARY
NOT FOR CONSTRUCTION
OR RECORDING

LANDFILL GAS PIPELINE REALIGNMENT
REALIGNMENT OF EXISTING LFG PIPELINE
TO ACCOMMODATE NEW UTILITIES

9TH STREET NE & 11TH AVE NE
WEST FARGO, ND

TEMPORARY CONSTRUCTION EASEMENTS

FILE NAME: G002.DWG
SCALE: 1"=N"

SHEET
G002



GENERAL NOTES

EXISTING BASE MAP REFERENCED FROM NORTH DAKOTA DEPARTMENT OF TRANSPORTATION PROJECT TMA-SU-FKP-8-99(045)PCN 23537 DATED 10/22/2025

HDR ENGINEERING, INC.

ISSUE	DATE	DESCRIPTION
	03/16/2026	ISSUED FOR BIDDING

PROJECT MANAGER

PROJECT NUMBER

PRELIMINARY
NOT FOR CONSTRUCTION
OR RECORDING

LANDFILL GAS PIPELINE REALIGNMENT
REALIGNMENT OF EXISTING LFG PIPELINE TO ACCOMMODATE NEW UTILITIES

9TH STREET NE & 11TH AVE NE
WEST FARGO, ND

EXISTING CONDITIONS

FILE NAME C100.DWG
SCALE

SHEET **C100**

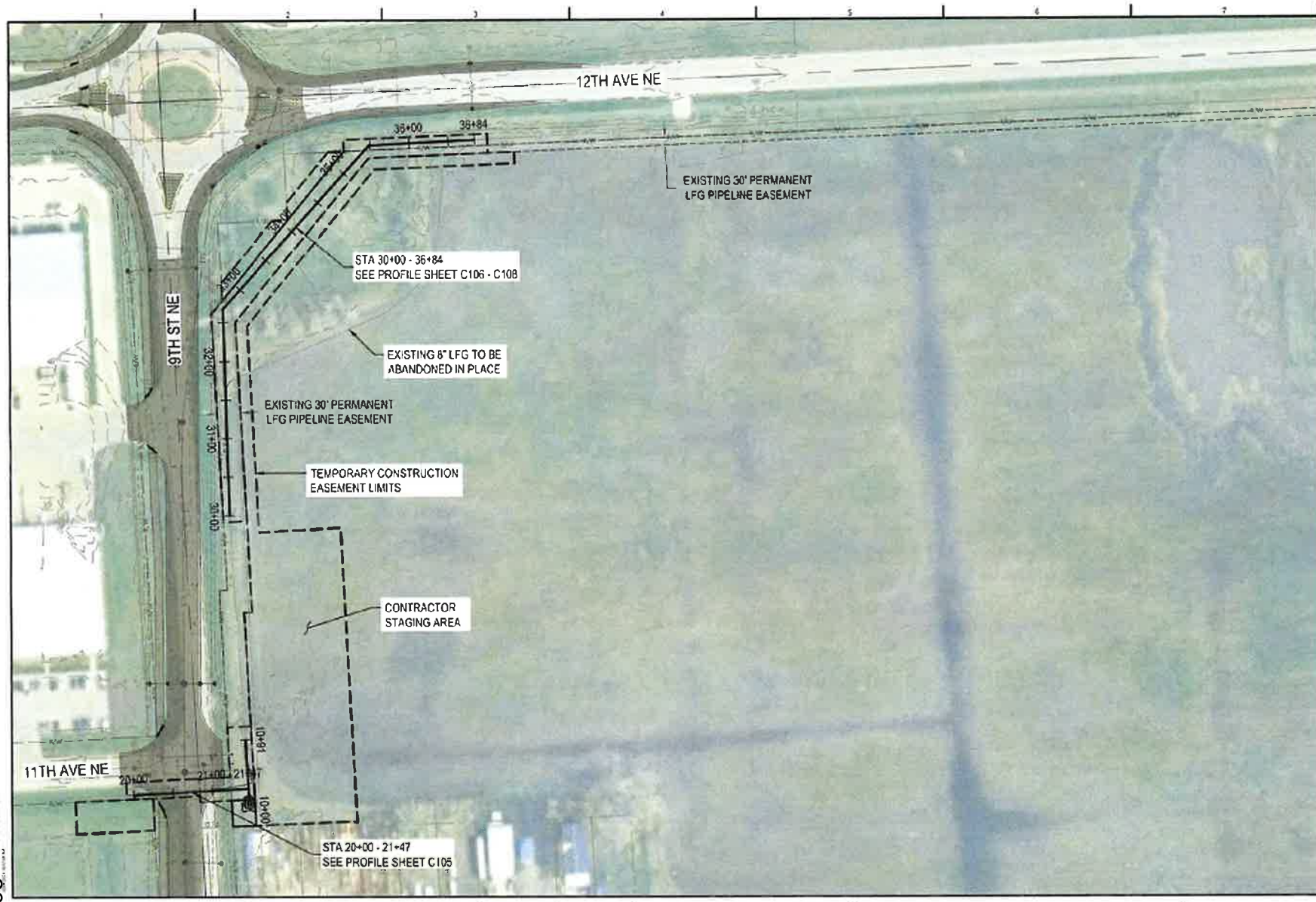

GENERAL NOTES

FUTURE UTILITY & PAVEMENT IMPROVEMENTS REFERENCED FROM THE NORTH DAKOTA DEPARTMENT OF TRANSPORTATION PROJECT TMA-SU-FXP-8-992(45)/PCN: 23537 DATED 10/22/2025

1. PIPELINE REALIGNMENT FROM STATION 10+00 TO 20+19 SHALL BE COMPLETED PRIOR TO INSTALLATION OF UTILITIES FOR NDDOT PROJECT TMA-SU-FXP-8-992(45)

HDR

HDR ENGINEERING, INC.
[illegible]

ISSUE	DATE	DESCRIPTION
	03/26/2026	ISSUED FOR BIDDING

PROJECT MANAGER	[illegible]
PROJECT NUMBER	[illegible]

PRELIMINARY
NOT FOR CONSTRUCTION
OR RECORDING

LANDFILL GAS PIPELINE REALIGNMENT
REALIGNMENT OF EXISTING LFG PIPELINE
TO ACCOMMODATE NEW UTILITIES

9TH STREET NE & 11TH AVE NE
WEST FARGO, ND

SITE LAYOUT

FILE NAME C101.DWG
SCALE 1"=120'

SHEET
C101

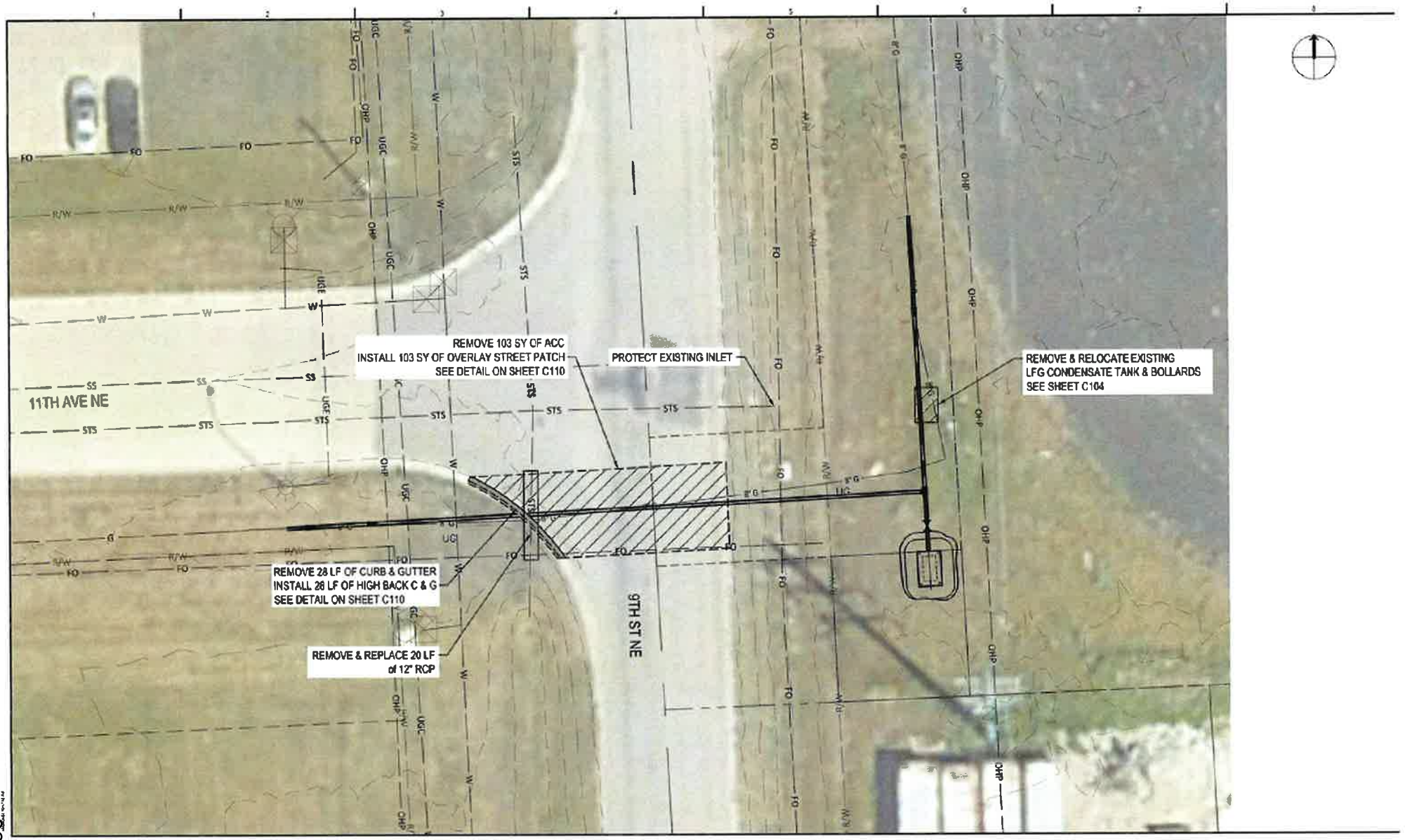

HDR

ISSUE	DATE	DESCRIPTION
	03/26/2020	ISSUED FOR BIDDING

PROJECT MANAGER

PROJECT NUMBER

PRELIMINARY
NOT FOR CONSTRUCTION
OR RECORDING

LANDFILL GAS PIPELINE REALIGNMENT
REALIGNMENT OF EXISTING LFG PIPELINE
TO ACCOMMODATE NEW UTILITIES

9TH STREET NE & 11TH AVE NE
WEST FARGO, ND

SITE DEMOLITION PLAN

FILE NAME C102.DWG
SCALE 1"=120'

SHEET
C102

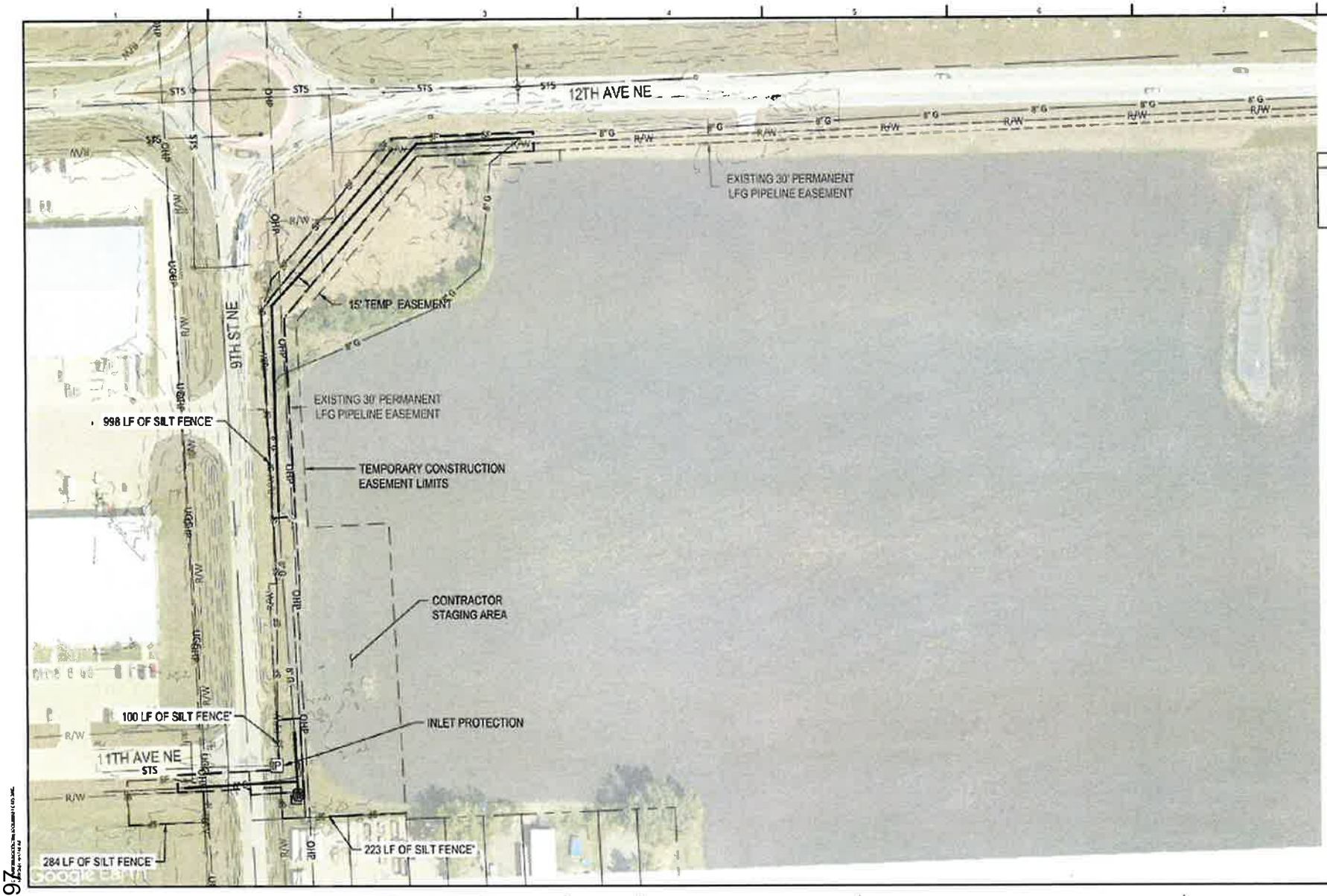

GENERAL NOTES

1. SEE EROSION CONTROL DETAILS ON SHEET C111
2. HYDROSEED DISTURBED AREAS

HDR

ISSUE	DATE	DESCRIPTION
-	03/26/2020	ISSUED FOR BIDDING

PROJECT MANAGER

PROJECT NUMBER

PRELIMINARY NOT FOR CONSTRUCTION OR RECORDING

LANDFILL GAS PIPELINE REALIGNMENT
REALIGNMENT OF EXISTING LFG PIPELINE TO ACCOMMODATE NEW UTILITIES

9TH STREET NE & 11TH AVE NE
WEST FARGO, ND

SITE EROSION CONTROL PLAN

FILE NAME C103.DWG
SCALE 1"=120'

SHEET C103

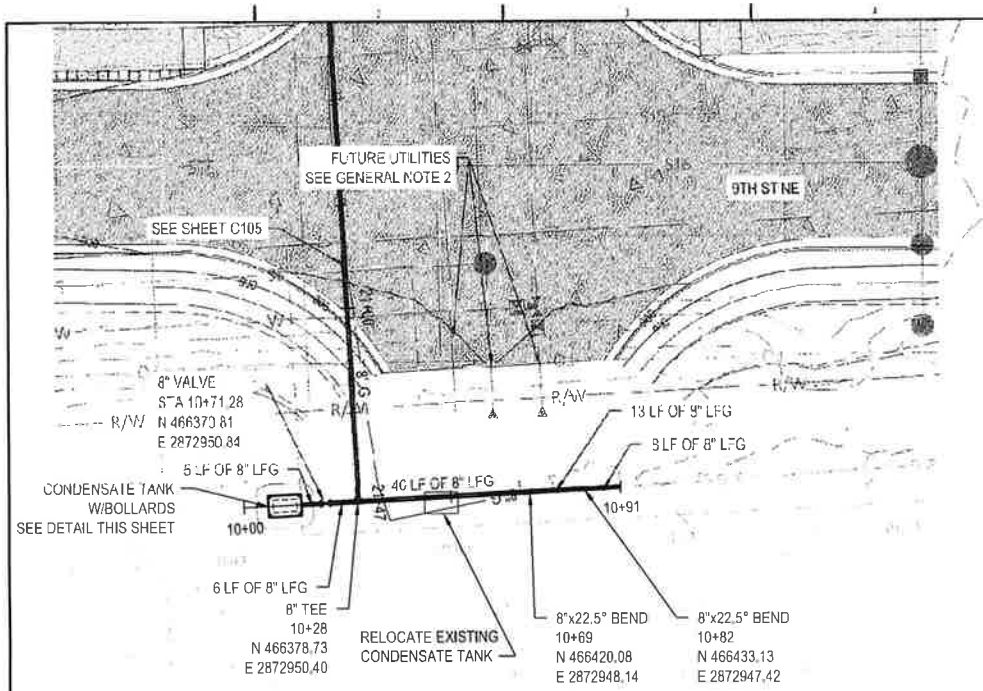

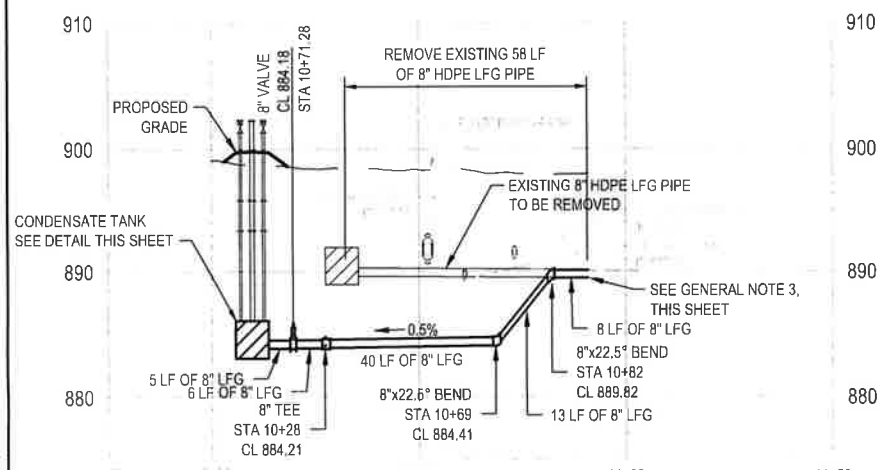

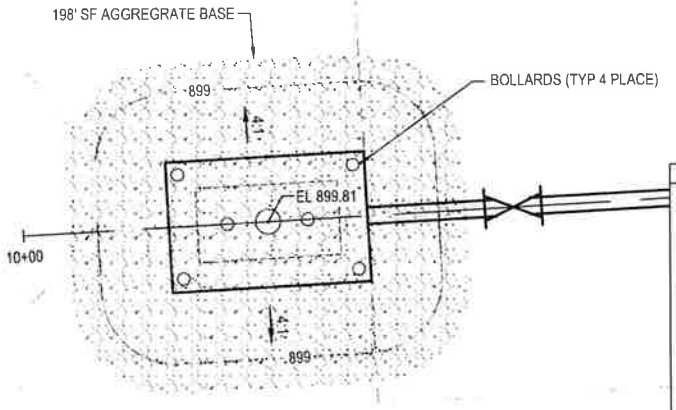

PROPOSED CONDENSATE TANK SITE

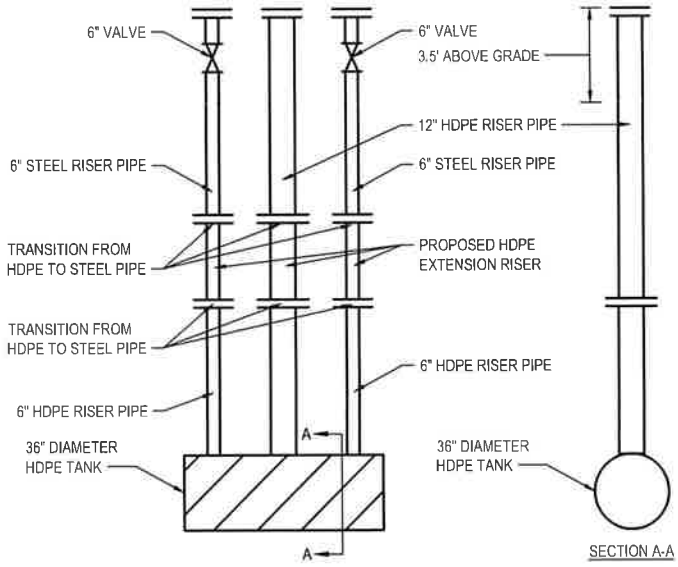

EXISTING CONDENSATE TANK

GENERAL NOTES

1. EXISTING CONDENSATE TANK TO BE RELOCATED, CONTRACTOR TO ADD EXTENSIONS TO THE THREE RISERS AS NEEDED TO ALLOW RISERS TO TERMINATE 3.5' ABOVE EXISTING GRADE. EXTENSIONS SHALL BE ADDED TO THE HDPE PORTION OF THE RISER PIPE AND THE STEEL PORTION OF PIPE TO BE REUSED FOR ABOVE GRADE PORTION OF RISER.

2. MINIMUM 3' SEPARATION BELOW FUTUR UTILITIES PER NORTH DAKOTA DEPARTMENT OF TRANSPORTATION PROJECT TMA-SU-FXP-8-992(45)/ PCN: 2353 DATED 10/22/2025

3. CONTRACTOR TO VERIFY LOCATION AN ELEVATION OF EXISTING LANDFILL GAS PIPELINE AT TIE-IN LOCATIONS.

HDR ENGINEERING, INC.
51 BROADWAY N.
FARGO, ND 58102

ISSUE	DATE	DESCRIPTION
	03/26/2026	ISSUED FOR BIDDING

PROJECT MANAGER: RANDY HANSEN
PROJECT NUMBER:

PRELIMINARY
NOT FOR CONSTRUCTION
OR RECORDING

LANDFILL GAS PIPELINE REALIGNMENT
REALIGNMENT OF EXISTING LFG PIPELINE
TO ACCOMMODATE NEW UTILITIES

9TH STREET NE & 11TH AVE NE
WEST FARGO, ND

9th STREET NE LFG REALIGNMENT
PLAN & PROFILE

FILE NAME: C104.DWG
SCALE: 1"=30'
0 15 30

SHEET
C104

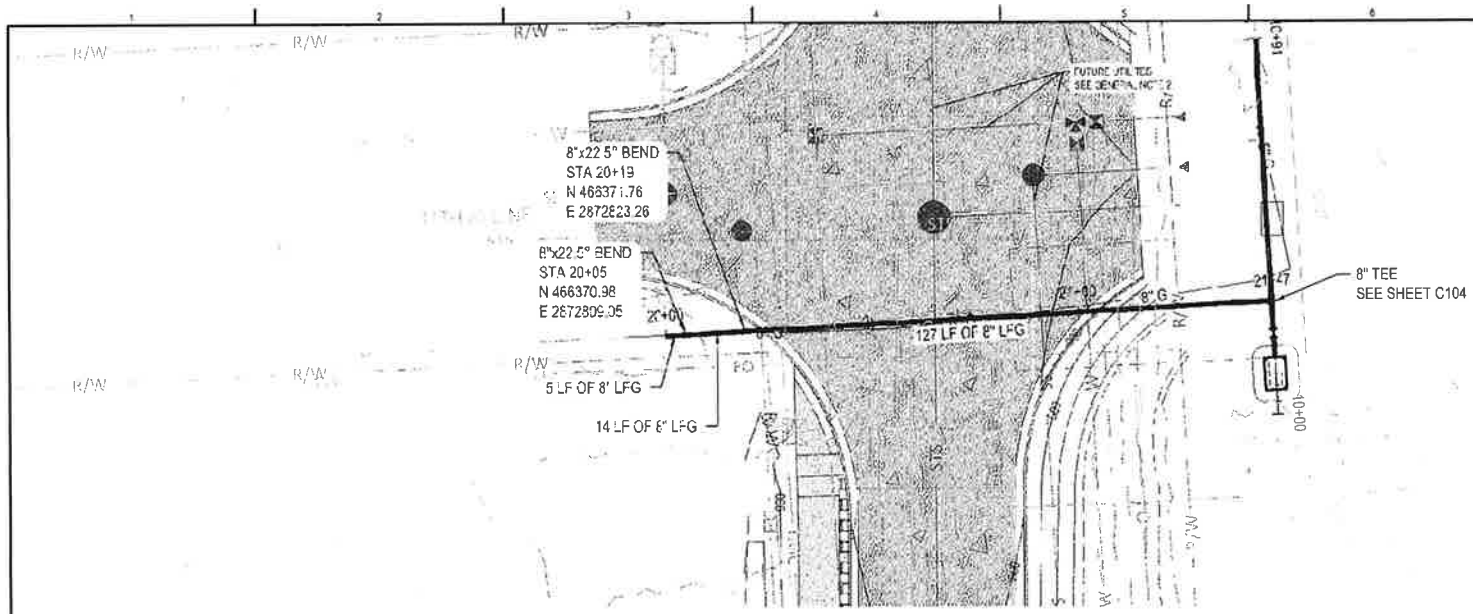

GENERAL NOTES

1. PROPOSED 8" HDPE LFG PIPE WITH CLASS 5 GRAVEL BACKFILL BENEATH FUTURE PAVEMENT.
2. MINIMUM 3' SEPARATION BELOW FUTURE STORM STORM SEWER PER NORTH DAKOTA DEPARTMENT OF TRANSPORTATION PROJECT TMA-SU-FXP-8-992(45)/ PCN: 23537 DATED 10/22/2025
3. CONTRACTOR TO VERIFY LOCATION AND ELEVATION OF EXISTING LANDFILL GAS PIPELINE AT TIE-IN LOCATIONS.
4. ALL PIPE TO BE HDPE SDR 17
5. ALL FITTINGS TO BE HDPE ELECTROFUSION

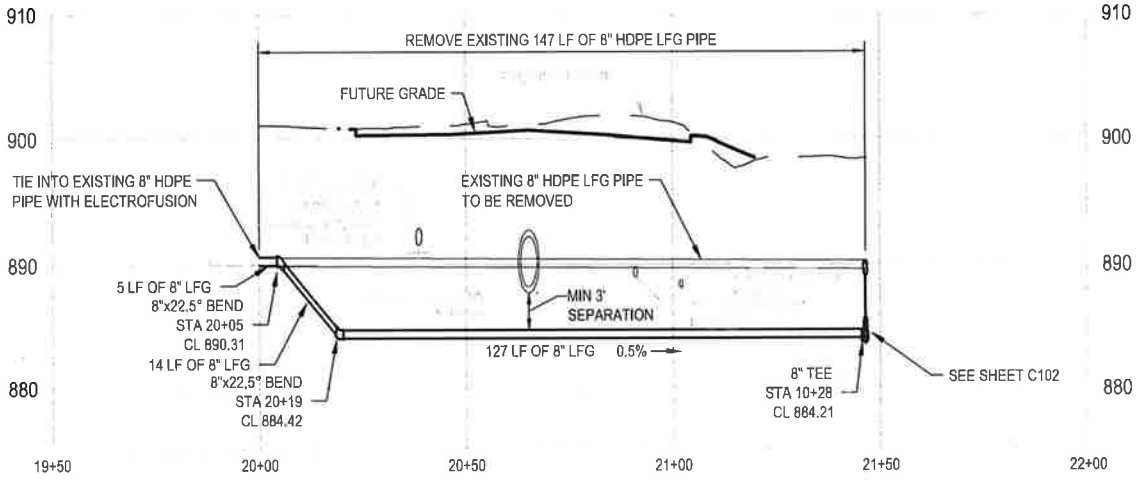

HDR ENGINEERING, INC.

ISSUE	DATE	DESCRIPTION
	03/26/2026	ISSUED FOR BIDDING

PROJECT MANAGER: RANDY HANSON

PROJECT NUMBER: 1734-0423

PRELIMINARY
NOT FOR CONSTRUCTION
OR RECORDING

LANDFILL GAS PIPELINE REALIGNMENT
REALIGNMENT OF EXISTING LFG PIPELINE TO ACCOMMODATE NEW UTILITIES

9TH STREET NE & 11TH AVE NE
WEST FARGO, ND

11th AVE NE LFG REALIGNMENT
PLAN & PROFILE

FILE NAME: C105.DWG
SCALE: 1"=30'

0 15 30

SHEET **C105**

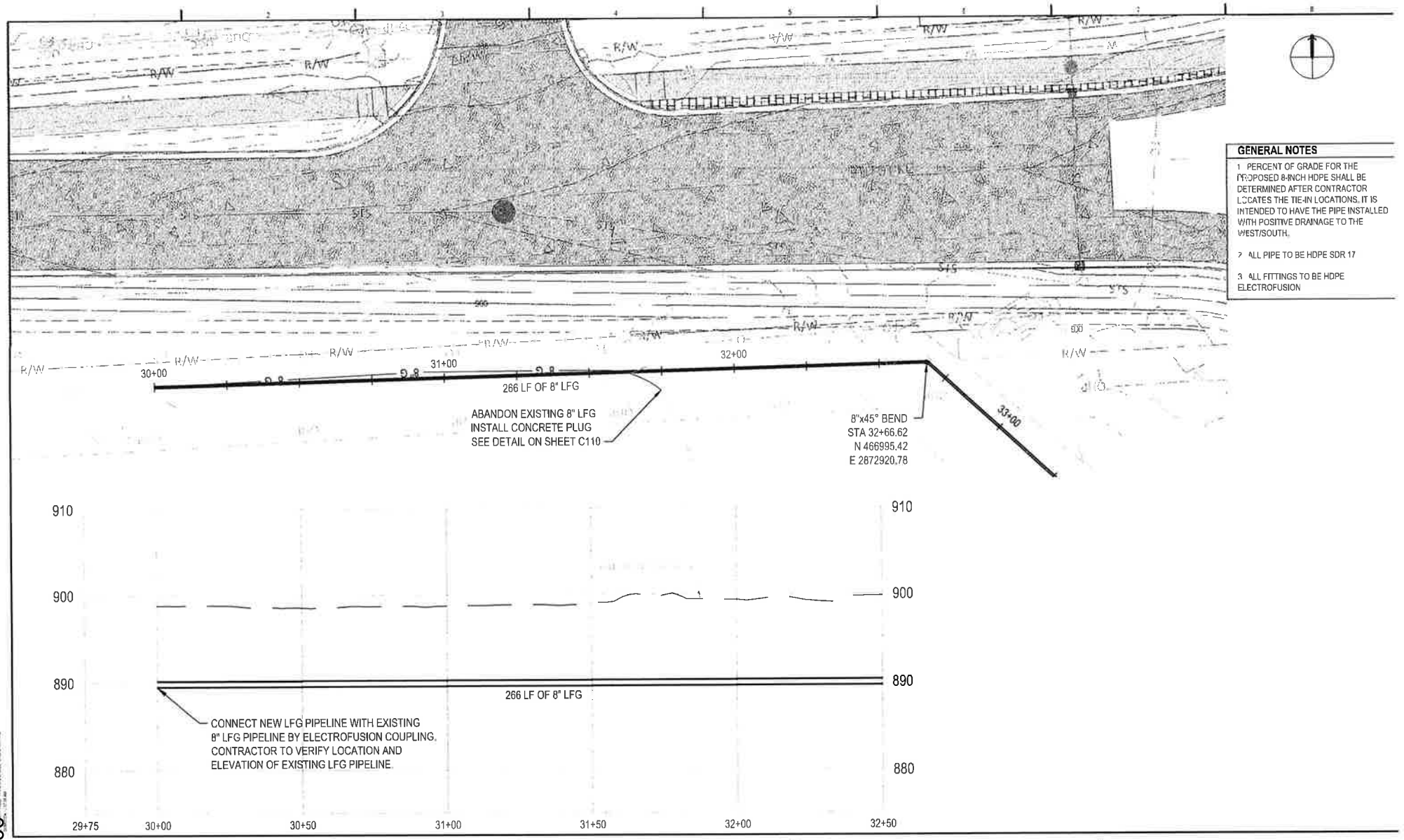

GENERAL NOTES

1. PERCENT OF GRADE FOR THE PROPOSED 8-INCH HDPE SHALL BE DETERMINED AFTER CONTRACTOR LOCATES THE TIE-IN LOCATIONS. IT IS INTENDED TO HAVE THE PIPE INSTALLED WITH POSITIVE DRAINAGE TO THE WEST/SOUTH.
2. ALL PIPE TO BE HDPE SDR 17
3. ALL FITTINGS TO BE HDPE ELECTROFUSION

HDR ENGINEERING, INC.

ISSUE	DATE	DESCRIPTION
	03/26/2020	ISSUED FOR BIDDING

PROJECT MANAGER: RANDY HANSEN
PROJECT NUMBER: 10044063

PRELIMINARY
NOT FOR CONSTRUCTION
OR RECORDING

LANDFILL GAS PIPELINE REALIGNMENT
REALIGNMENT OF EXISTING LFG PIPELINE
TO ACCOMMODATE NEW UTILITIES

9TH STREET NE & 11TH AVE NE
WEST FARGO, ND

LFG REALIGNMENT
PLAN & PROFILE

FILE NAME: C105-C108.DWG
SCALE: 1"=30'
0 15 30

SHEET
C106

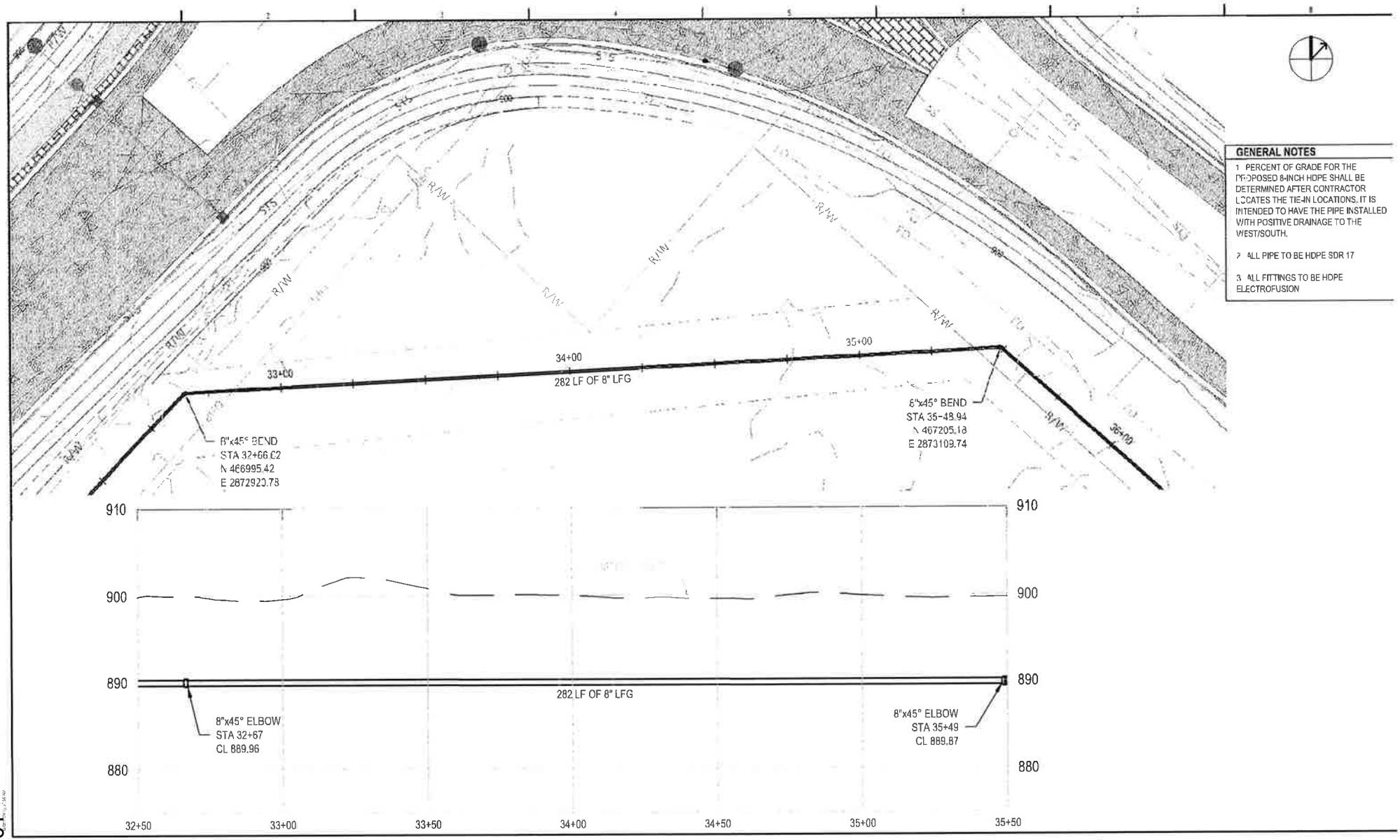

GENERAL NOTES

1. PERCENT OF GRADE FOR THE PROPOSED 8-INCH HDPE SHALL BE DETERMINED AFTER CONTRACTOR LOCATES THE TIE-IN LOCATIONS. IT IS INTENDED TO HAVE THE PIPE INSTALLED WITH POSITIVE DRAINAGE TO THE WEST/SOUTH.
2. ALL PIPE TO BE HDPE SDR 17
3. ALL FITTINGS TO BE HDPE ELECTROFUSION

HDR ENGINEERING INC
51 BROADWAY N.
FARGO, ND 58102

ISSUE	DATE	DESCRIPTION
	03/26/2026	ISSUED FOR BIDDING

PROJECT MANAGER: RANDY HANSON
PROJECT NUMBER:

PRELIMINARY
NOT FOR CONSTRUCTION
OR RECORDING

LANDFILL GAS PIPELINE REALIGNMENT
REALIGNMENT OF EXISTING LFG PIPELINE
TO ACCOMMODATE NEW UTILITIES

9TH STREET NE & 11TH AVE NE
WEST FARGO, ND

LFG REALIGNMENT
PLAN & PROFILE

FILE NAME: C106-C108.DWG
SCALE: 1"=30'
0 15 30

SHEET
C107

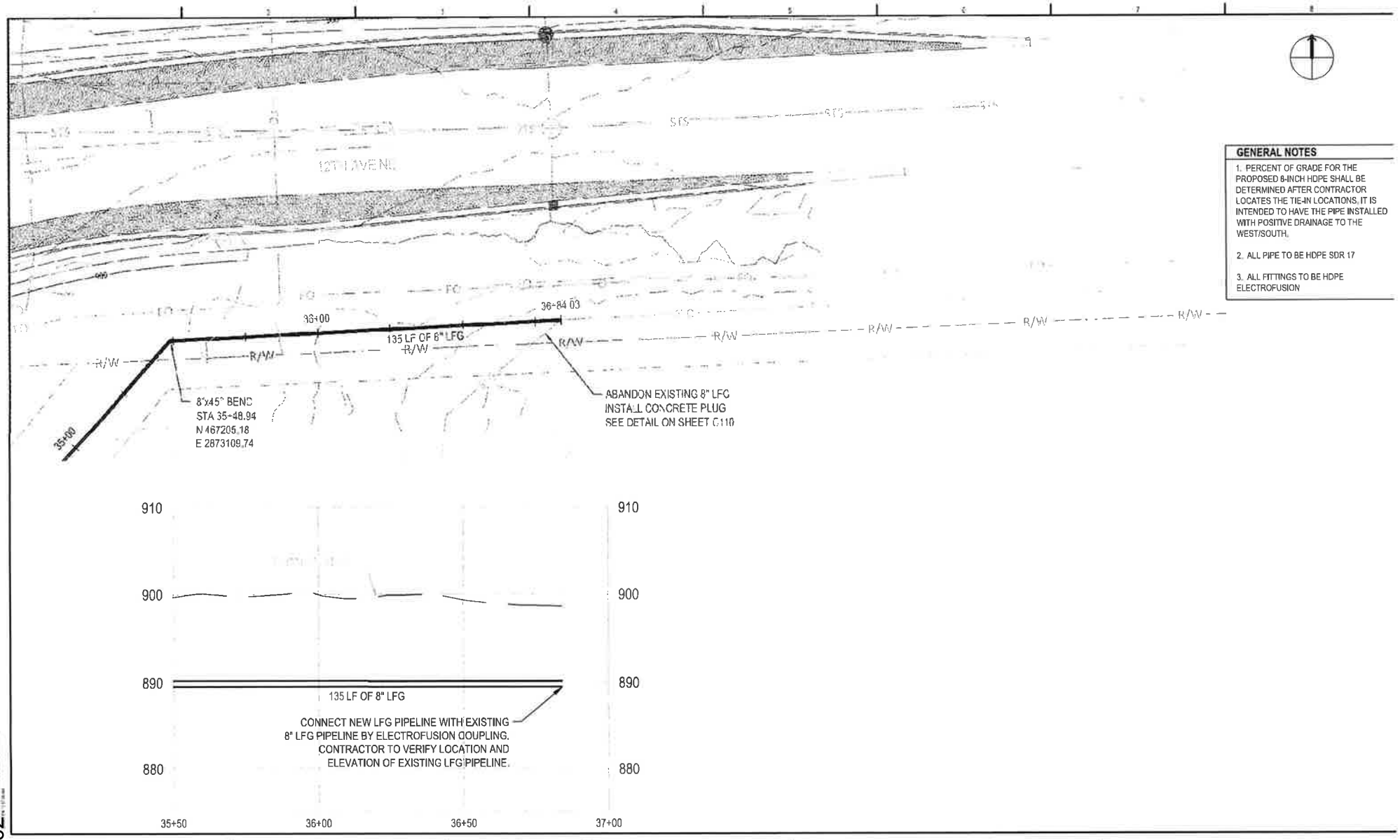

GENERAL NOTES

1. PERCENT OF GRADE FOR THE PROPOSED 8-INCH HDPE SHALL BE DETERMINED AFTER CONTRACTOR LOCATES THE TIE-IN LOCATIONS. IT IS INTENDED TO HAVE THE PIPE INSTALLED WITH POSITIVE DRAINAGE TO THE WEST/SOUTH.
2. ALL PIPE TO BE HDPE SDR 17
3. ALL FITTINGS TO BE HDPE ELECTROFUSION

HDR ENGINEERING INC.

ISSUE	DATE	DESCRIPTION
	03/26/2026	ISSUED FOR BIDDING EW

PROJECT MANAGER: RANDY HANSON
PROJECT NUMBER:

PRELIMINARY
NOT FOR CONSTRUCTION
OR RECORDING

LANDFILL GAS PIPELINE REALIGNMENT
REALIGNMENT OF EXISTING LFG PIPELINE
TO ACCOMMODATE NEW UTILITIES

9TH STREET NE & 11TH AVE NE
WEST FARGO, ND

LFG REALIGNMENT
PLAN & PROFILE

FILE NAME: C106-C108.DWG
SCALE: 1"=30'
0 15 30

SHEET
C108

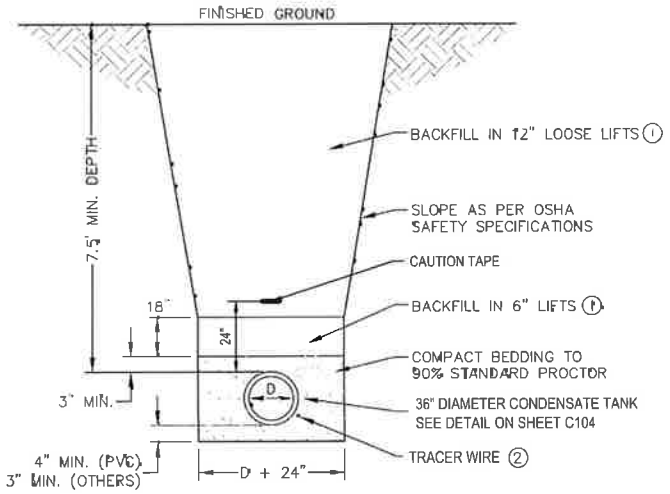

(1) COMPACT TO 95% MINIMUM STANDARD PROCTOR DENSITY.
(2) INSTALL TRACER WIRE PER SPECIFICATION.

TRENCH DETAIL
NO SCALE

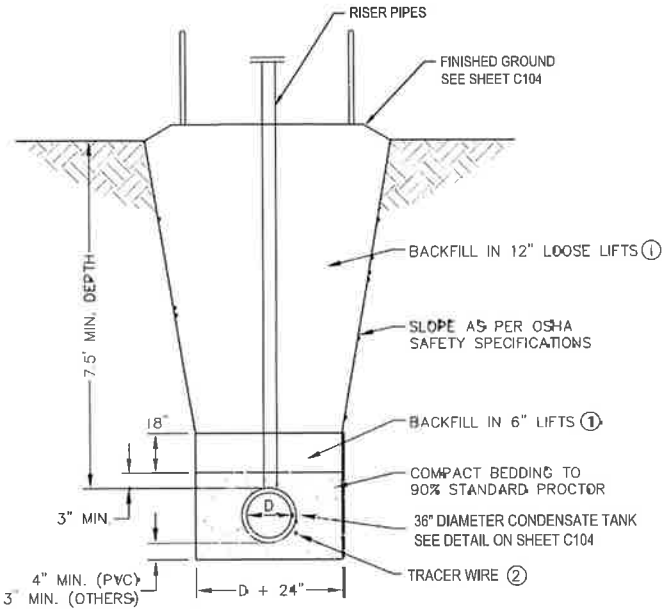

(1) COMPACT TO 95% MINIMUM STANDARD PROCTOR DENSITY.
(2) INSTALL TRACER WIRE PER SPECIFICATION.

LFG CONDENSATE TANK TRENCH DETAIL
NO SCALE

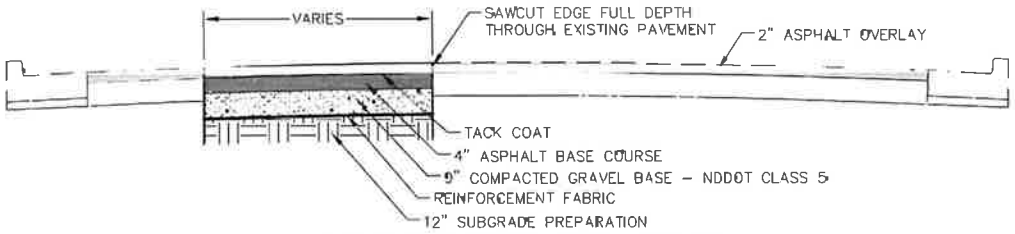

OVERLAY STREET PATCH - ASPHALT SURFACE
NO SCALE

HDR ENGINEERING, INC
51 BROADWAY N.
FARGO, ND 58102
(701) 353-6100

ISSUE	DATE	DESCRIPTION
	03/26/2026	ISSUED FOR BIDDING

PROJECT MANAGER: RANDY HANSON
PROJECT NUMBER: 10144351

PRELIMINARY
NOT FOR CONSTRUCTION
OR RECORDING

LANDFILL GAS PIPELINE REALIGNMENT
REALIGNMENT OF EXISTING LFG PIPELINE
TO ACCOMMODATE NEW UTILITIES
9TH STREET NE & 11TH AVE NE
WEST FARGO, ND

CIVIL DETAILS

FILE NAME: C109-C110.DWG
SCALE: *

SHEET
C109

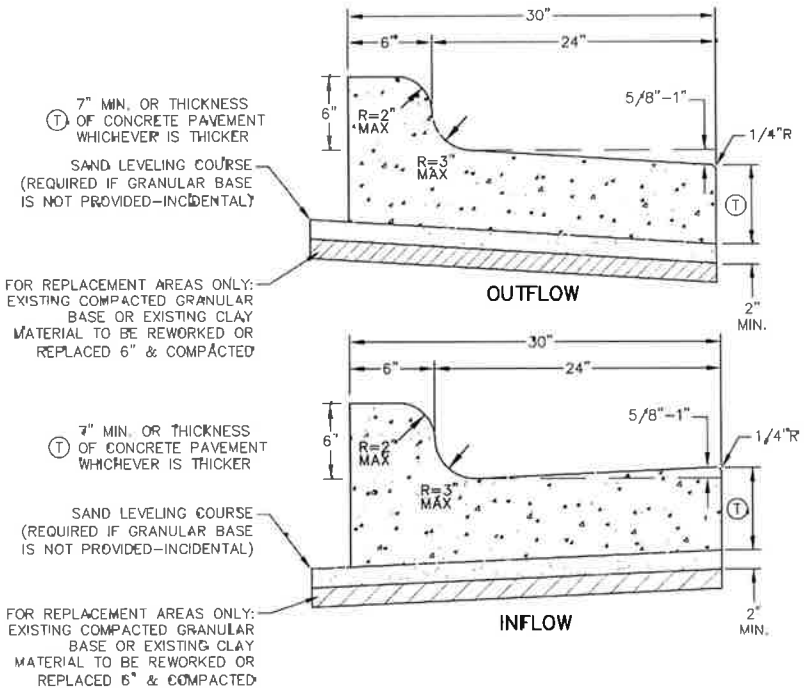

HIGH BACK CURB AND GUTTER

NO SCALE

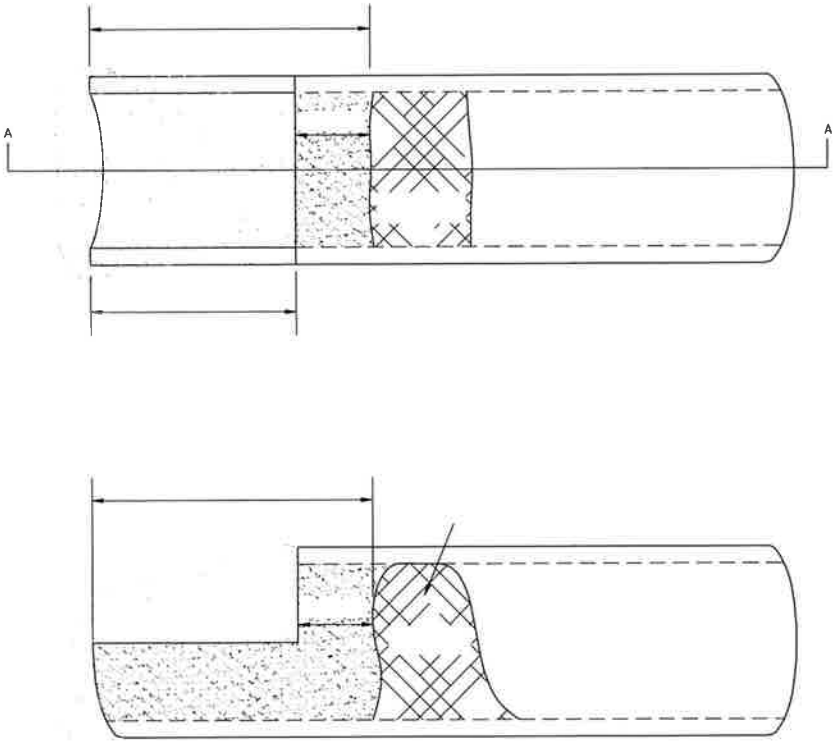

CONCRETE PLUG

NO SCALE

HDR ENGINEERING, INC
51 BROADWAY N.
FARGO, ND 58102
(701) 353-9100

ISSUE	DATE	DESCRIPTION
	03/24/2026	ISSUED FOR BIDDING

PROJECT MANAGER: RANDY HANSON

PROJECT NUMBER:

PRELIMINARY
NOT FOR CONSTRUCTION
OR RECORDING

LANDFILL GAS PIPELINE REALIGNMENT
REALIGNMENT OF EXISTING LFG PIPELINE
TO ACCOMMODATE NEW UTILITIES

9TH STREET NE & 11TH AVE NE
WEST FARGO, ND

CIVIL DETAILS

FILE NAME: C109-C110.DWG
SCALE: -

SHEET: **C110**

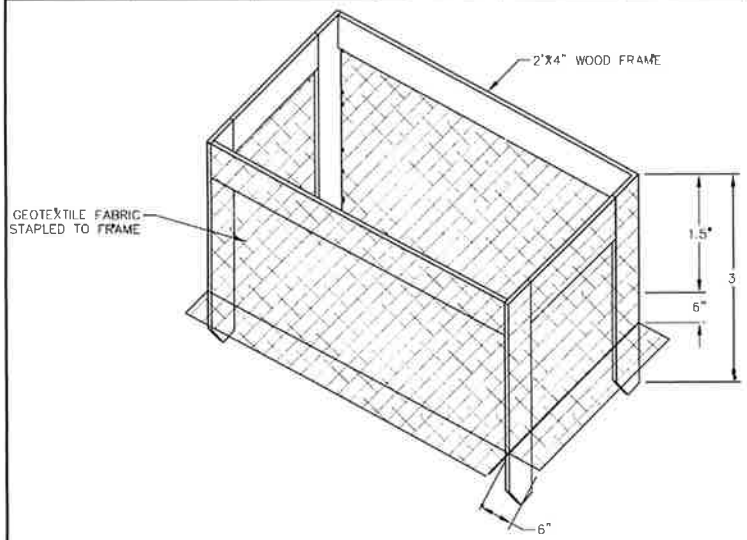

INLET PROTECTION TYPE A-2

NO SCALE *EROSION CONTROL 03.01.22*

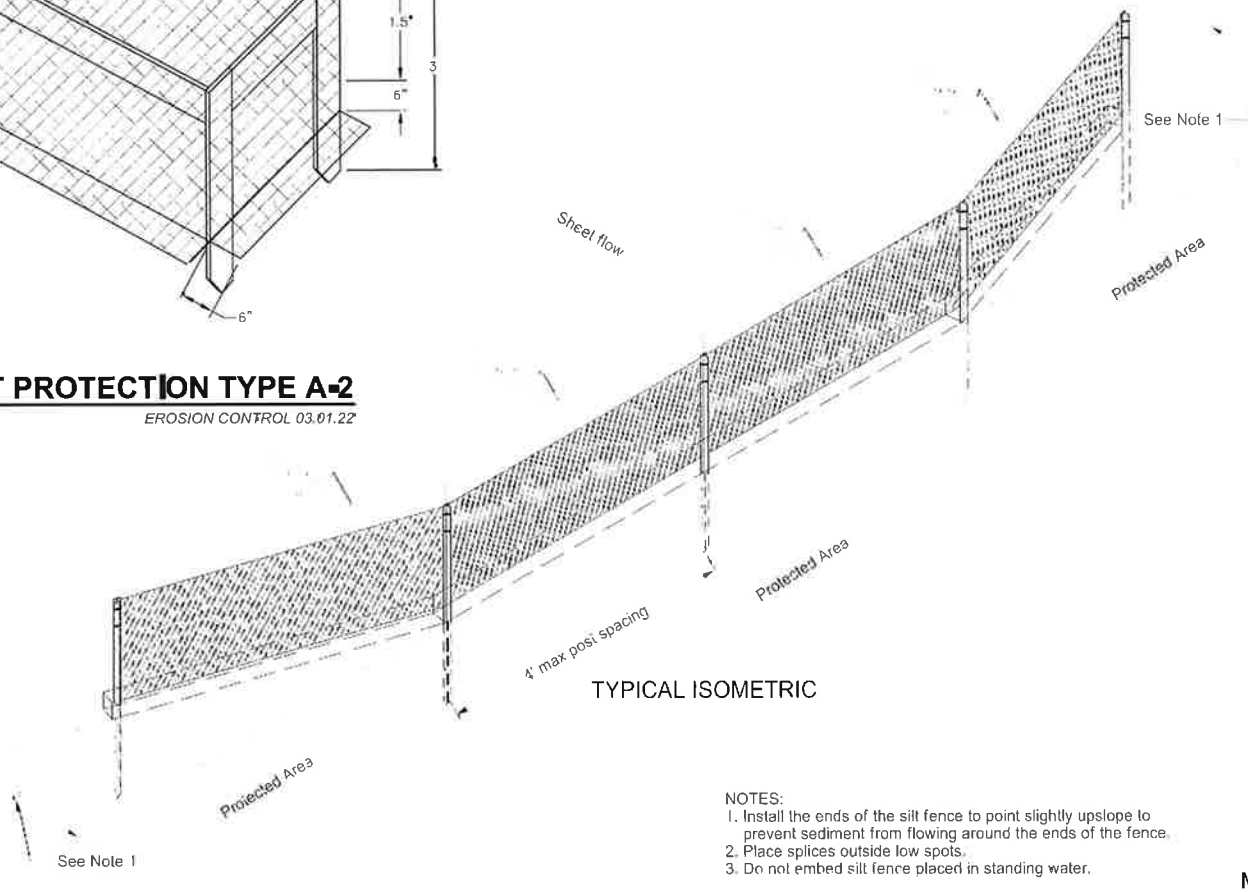

TYPICAL ISOMETRIC

NOTES:
1. Install the ends of the silt fence to point slightly upslope to prevent sediment from flowing around the ends of the fence.
2. Place splices outside low spots.
3. Do not embed silt fence placed in standing water.

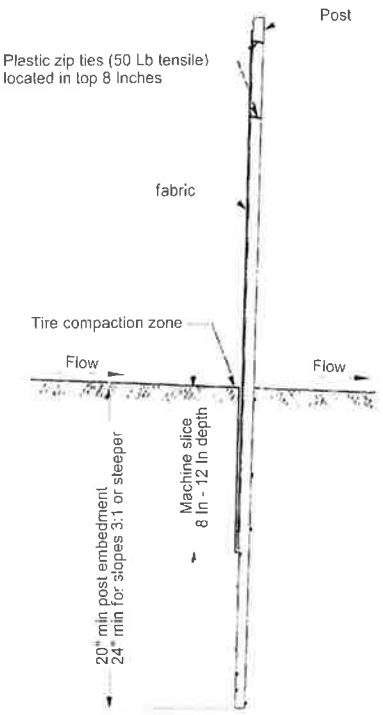

MACHINE SLICED INSTALLATION DETAIL

EROSION AND SILTATION CONTROLS - SILT FENCE

HDR ENGINEERING, INC.
51 BROADWAY N.
FARGO, ND 58102
(701) 353-4100

ISSUE	DATE	DESCRIPTION
	03/26/2026	ISSUED FOR BIDDING

PROJECT MANAGER: RANDY HANSON
PROJECT NUMBER: [illegible]

PRELIMINARY
NOT FOR CONSTRUCTION
OR RECORDING

LANDFILL GAS PIPELINE REALIGNMENT
REALIGNMENT OF EXISTING LFG PIPELINE
TO ACCOMMODATE NEW UTILITIES

9TH STREET NE & 11TH AVE NE
WEST FARGO, ND

CIVIL DETAILS

FILE NAME: C109-C110.DWG
SCALE: -
SHEET: C111

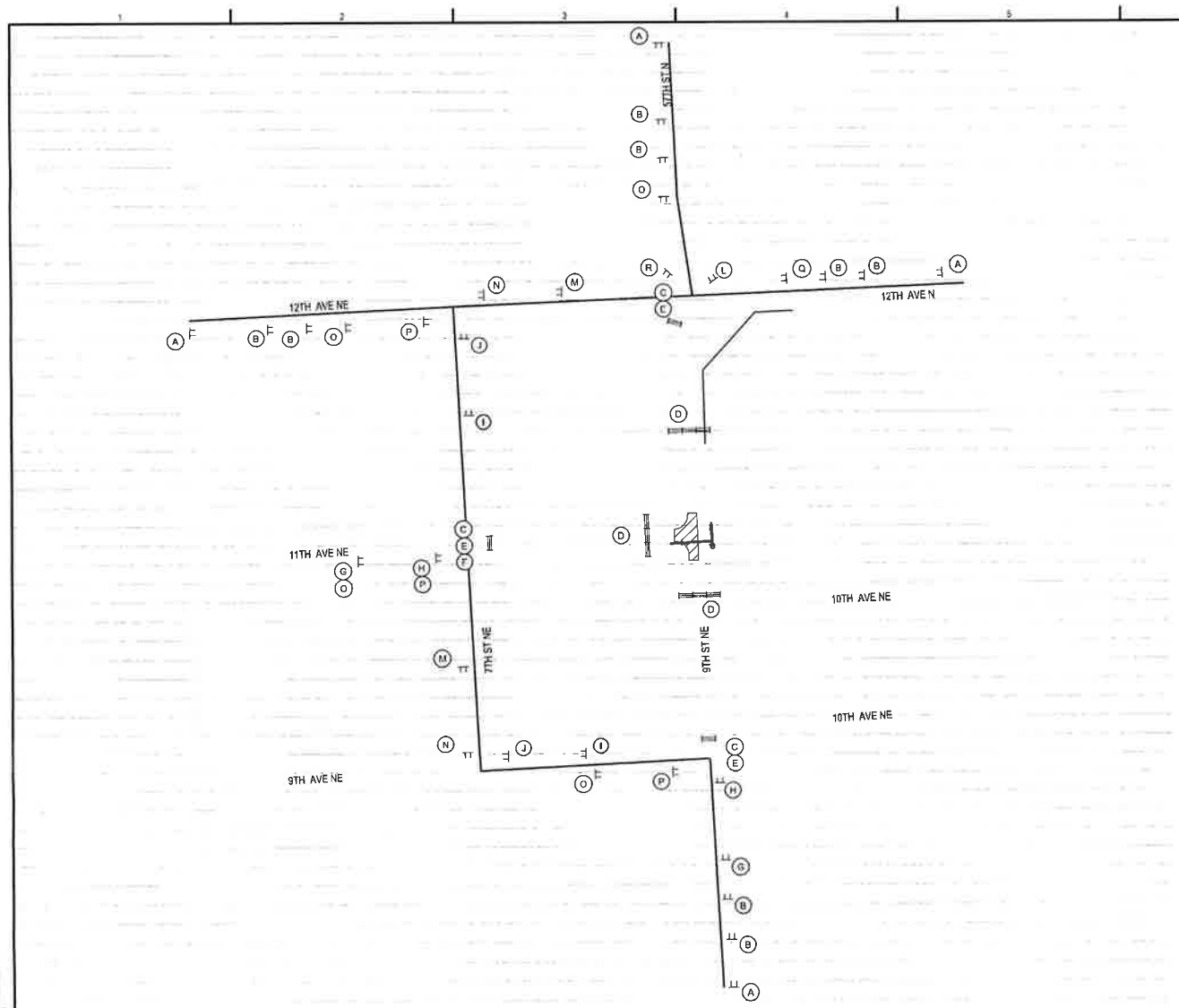

A — W20-3-48 POST MOUNTED

B — W20-2-48 POST MOUNTED

C — R11-4A-60 BARRICADE MOUNTED

D — R11-2A-48 BARRICADE MOUNTED

E — M4-10L-48 BARRICADE MOUNTED

F — M4-10R-48 BARRICADE MOUNTED

G

DETOUR	M4-8-24
NORTH	M3-1-24
9th St NE	CONSIGN 1
	M5-1-21

H

DETOUR	M4-8-24
NORTH	M3-1-24
9th St NE	CONSIGN 1
	M6-1-21

I

DETOUR	M4-8-24
NORTH	M3-1-24
9th St NE	CONSIGN 1
	M5-1-21

J

DETOUR	M4-8-24
NORTH	M3-1-24
9th St NE	CONSIGN 1
	M6-1-21

K

DETOUR	M4-8-24
NORTH	M3-1-24
9th St NE	CONSIGN 1
	M5-3-21

L

DETOUR	M4-8-24
NORTH	M3-1-24
9th St NE	CONSIGN 1
	M6-2-21

M

DETOUR	M4-8-24
SOUTH	M3-3-24
9th St NE	CONSIGN 1
	M5-1-21

N

DETOUR	M4-8-24
SOUTH	M3-3-24
9th St NE	CONSIGN 1
	M6-1-21

O

DETOUR	M4-8-24
SOUTH	M3-3-24
9th St NE	CONSIGN 1
	M5-1-21

P

DETOUR	M4-8-24
SOUTH	M3-3-24
9th St NE	CONSIGN 1
	M6-1-21

Q

DETOUR	M4-8-24
SOUTH	M3-3-24
9th St NE	CONSIGN 1
	CONSIGN 2

R

DETOUR	M4-8-24
SOUTH	M3-3-24
9th St NE	CONSIGN 1
	M6-2-21

TYPE III BARRICADE

SIGN

Work Zone

Detour Route

GENERAL NOTES

1. CONTRACTOR SHALL COORDINATE TRAFFIC CONTROL MEASURES WITH THE 9TH STREET PROJECT CONTRACTOR.

HDR ENGINEERING, INC.

ISSUE	DATE	DESCRIPTION
	03/26/2026	ISSUED FOR BIDDING

PROJECT MANAGER: RANDY HAVSTAD

PROJECT NUMBER:

PRELIMINARY
NOT FOR CONSTRUCTION OR RECORDING

LANDFILL GAS PIPELINE REALIGNMENT
REALIGNMENT OF EXISTING LFG PIPELINE TO ACCOMMODATE NEW UTILITIES

9TH STREET NE & 11TH AVE NE
WEST FARGO, ND

TRAFFIC CONTROL PLAN

FILE NAME: TR101.DWG
SCALE: 1"=400'

SHEET: TR101

THE CITY OF Fargo FAR MORE | SOLID WASTE

DIVISION OF SOLID WASTE
2301 8th Avenue North
Fargo, North Dakota 58102
Office: 701.241.1449 | Fax: 701.241.8109
FargoND.gov

26

November 18, 2026

Honorable Board of City Commissioners
City of Fargo
225 4rd Street North
Fargo, ND 58102

RE: Temporary Construction Easement with ARD Properties, LLC for project SW 26-01 Landfill Gas Pipeline Realignment

Dear Commissioners:

Attached is a temporary construction easement agreement between the City of Fargo and ARD Properties, LLC. to accommodate realignment of the Landfill Gas Pipeline following the 2026 sale of land located in West Fargo. As part of the sale agreement a portion of the Landfill Gas Pipeline was requested to be relocated towards the existing Right-of-Way. This easement is needed to complete trenching and boring along the west side of 9th St NE as shown.

There is no cost associated with this easement request.

SUGGESTED MOTION:

Approve the Temporary Construction Easement with ARD Properties, LLC for project SW 26-01.

Respectfully submitted,

Scott Olson, PE
Solid Waste Utility Director

EASEMENT
(Temporary Construction Easement)

KNOW ALL MEN BY THESE PRESENTS that **ARD Properties, LLC**, a North Dakota Limited Liability Company, whose address is 345 12th Ave NE, West Fargo, ND 58078, hereinafter referred to as "Grantor", for and in consideration of the sum of One and no/100 Dollars ($1.00) and other valuable consideration, to it in hand paid the receipt whereof is hereby acknowledged, **HEREBY GRANTS UNTO THE CITY OF FARGO, CASS COUNTY, NORTH DAKOTA,** a municipal corporation, its successors and assigns, hereinafter referred to as "Grantee", temporary construction easements under, over, upon and in the lands hereinafter described for the purpose of storage of materials and job site layout construction, together with the customary appurtenances, said tract being described as follows:

Tract A:

That part of the Northwest Quarter of Section 4, Township 139 North, Range 49 West of the Fifth Principal Meridian, in the City of West Fargo, Cass County, North Dakota, described as follows:

Commencing at the northwest corner of said Northwest Quarter; thence South 02°59'15" East, along the westerly line of said Northwest Quarter, for a distance of 902.35 feet; thence North 83°27'25" East for a distance of 55.59 feet to the True Point of Beginning; thence North 01°30'27" East, for a distance of 244.56 feet; thence North 03°16'29" West for a distance of 207.89 feet; thence North 13°00'04" East, for a distance of 81.44 feet; thence North 67°08'19" East for a distance of 12.34 feet; thence South 13°00'04" West, for a distance of 87.24 feet; thence South 03°16'29" East, for a distance of 137.36 feet; thence North 87°39'19" East, for a distance of 85.70 feet; thence South 02°59'15" East for a

distance of 350.00 feet; thence South 87°39'19"West, for a distance of 100.00 feet; thence North 02°59'15" West for a distance of 37.79 feet; thence South 83°27'25" West, for a distance of 14.55 feet to the True Point of Beginning.

Said tract contains 0.87 acres, more or less, and is subject to easements as may be of record.

Tract B:

That part of the Northwest Quarter of Section 4, Township 139 North, Range 49 West of the Fifth Principal Meridian, in the City of West Fargo, Cass County, North Dakota, described as follows:

Commencing at the northwest corner of said Northwest Quarter; thence South 80°23'53" East for a distance of 410.62 feet; to the True Point of Beginning; thence North 87°39'19" East, for a distance of 100.00 feet; thence South 02°20'41" East for a distance of 15.00 feet; thence South 87°39'19" West, for a distance of 120.21 feet; thence North 51°04'27" East for a distance of 24.17 feet; to the True Point of Beginning.

Said tract contains 0.04 acres, more or less, and is subject to easements as may be of record.

The easement areas are pictorially represented on the attached Exhibit A.

Grantor, its successors and assigns, hereby covenants to and with Grantee that Grantee's officers, contractors, agents and employees may at any and all times when necessary or convenient to do so, go over and upon said above-described parcel of land and perform any and all acts necessary or convenient to carry into effect the purpose for which the grant is made.

Grantor, its successors and assigns, further agree that they will not disturb, injure, molest or in any manner interfere with said parcels to be used for storage of materials and job site layout during the construction phase of said project, and Grantor expressly warrants and states that no buildings, trees, shrubs or other obstacles of any kind shall be placed or located upon the parcels so as to interfere in any manner with the said parcels during the construction phase. Grantee, at its own expense, shall leave the premises in as good condition as they were prior to the time construction activities began.

This Easement shall begin on the beginning of construction and shall terminate upon the earlier of the completion of construction or December 31, 2026.

This Easement is granted in connection with the pipeline relocation project described in Section 1.7 of that certain Purchase Agreement dated July 24, 2025, between Grantee, as seller, and Grantor, as buyer (the "Purchase Agreement"). Nothing in this Easement modifies, waives, or releases any right or obligation of the parties under the Purchase Agreement, including the provisions of Section 1.7 regarding completion of the pipeline relocation project, the Partial Release of Easement, and the Pipeline Escrow Funds.

Exhibit A

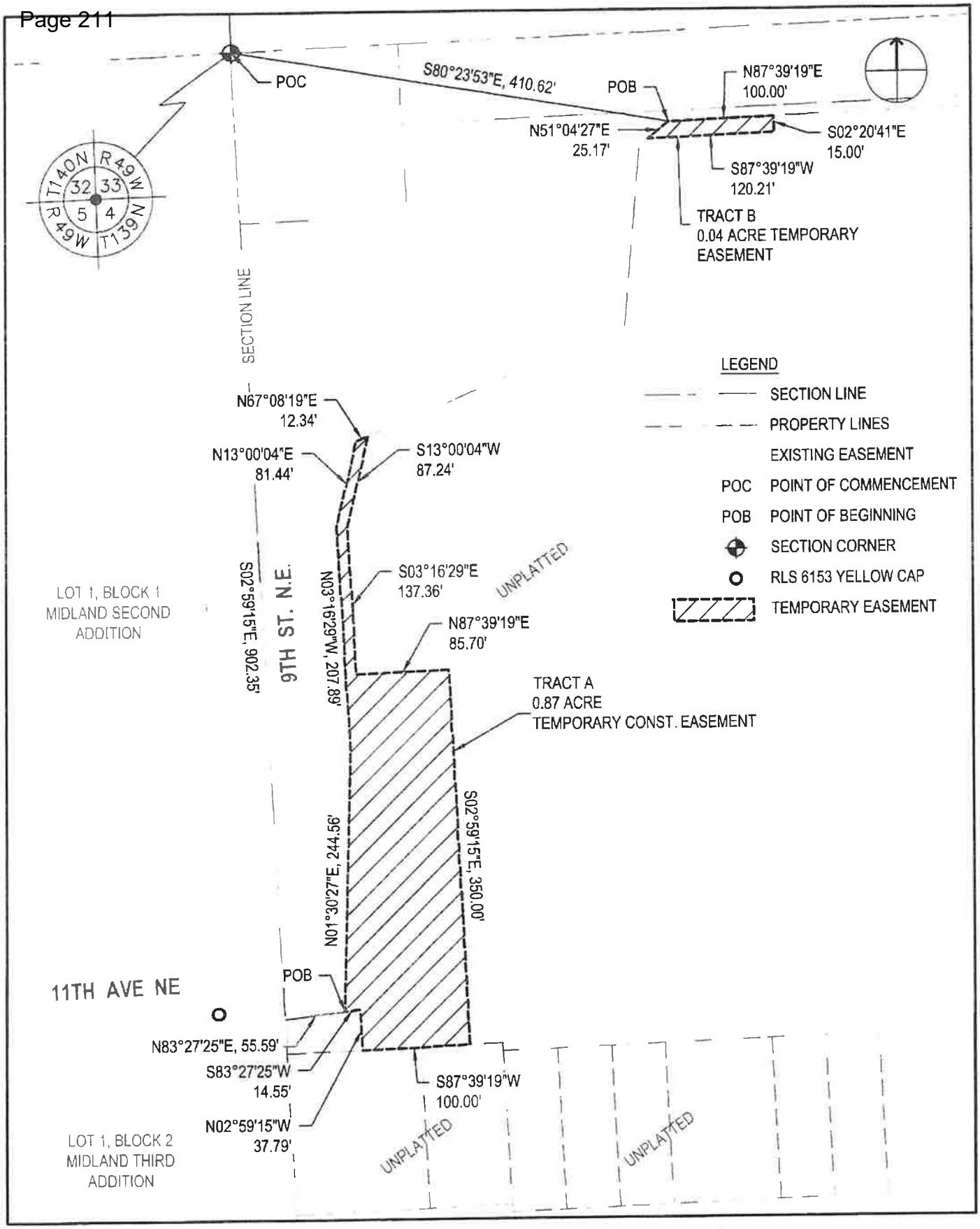

HDR ENGINEERING, INC
51 BROADWAY N.
FARGO, ND 58102
(701) 353-6100

TEMPORARY CONSTRUCTION EASEMENT

ARD PROPERTIES, LLC
9TH STREET NE & 12TH AVE NE
WEST FARGO, ND

SHEET
EXHIBIT A

IN WITNESS WHEREOF, Grantor has set his hand and caused this instrument to be executed this 8 day of September, 2026.

GRANTOR:

ARD Properties, LLC

By:
Its:

STATE OF NORTH DAKOTA)
)
COUNTY OF CASS)

On this 8 day of September, 2026, before me a notary public in and for said county and state, personally appeared Trent Ducla, known to me to be the President of ARD Properties, LLC, and executed the within and foregoing instrument, and acknowledged the same.

(SEAL)

JOLENE HARTY
Notary Public
State of North Dakota
My Commission Expires Jan 26, 2027

Notary Public
My Commission Expires: 1-26-27

GRANTEE:

City of Fargo, North Dakota, a North Dakota Municipal Corporation

_____

Josh Boschee, Mayor

ATTEST:

_____

Angie Bear, Deputy Auditor on behalf of City Auditor

STATE OF NORTH DAKOTA)
)
COUNTY OF CASS)

On this _____ day of _____, 2026, before me a notary public in and for said county and state, personally appeared Timothy J. Mahoney and Angie Bear, known to me to be the Mayor and Deputy City Auditor, respectively, of the city of Fargo, the Grantee described in and that executed the within and foregoing instrument, and acknowledged to me that said Grantee executed the same.

_____

Notary Public
My Commission Expires:

The legal description was prepared by:
Brian Jensen. PLS, ND. US.
Professional Land Surveyor
LS-6651
(701) 237-5065

This document prepared by:
Kasey D. McNary (ND# 06590)
Assistant City Attorney
SERKLAND LAW FIRM
10 Roberts Street North
Fargo, ND 58102
(701) 232-8957



STATE COUNTY MAP

GOVERNING SPECIFICATIONS	DATE PUBLISHED
CITY OF WEST FARGO ENGINEERING SPECIFICATIONS	02/20/25
SPECIAL INSTRUCTION TO BIDDERS	MARCH 2026



Contract Drawings For

LANDFILL GAS PIPELINE REALIGNMENT

REALIGNMENT OF EXISTING LFG PIPELINE TO ACCOMMODATE FUTURE UTILITIES

HDR Project No.
10447503

WEST FARGO, ND
MARCH 2026

INDEX OF DRAWINGS

G000	COVER SHEET	
G001	GENERAL CIVIL LEGEND & NOTES	
G002	TEMPORARY CONSTRUCTION EASEMENTS	
C100	EXISTING CONDITIONS	
C101	SITE LAYOUT PLAN	
C102	SITE DEMOLITION PLAN	
C103	SITE EROSION CONTROL PLAN	
C104	9TH STREET NE LFG PIPELINE REALIGNMENT PLAN & PROFILE	
C105	11TH AVE NE LFG PIPELINE REALIGNMENT PLAN & PROFILE	
C106	LFG RE-ALIGNMENT PLAN & PROFILE	(STA 30+00 - 32+50)
C107	LFG RE-ALIGNMENT PLAN & PROFILE	(STA 32+50 - 35+50)
C108	LFG RE-ALIGNMENT PLAN & PROFILE	(STA 35+50 - 37+00)
C109	CIVIL DETAILS	
C110	CIVIL DETAILS	
C111	EROSION CONTROL DETAILS	
TR101	TRAFFIC CONTROL PLAN	

UTILITY/CIVIL LINE SYMBOLOGY

R/W	RIGHT-OF-WAY
	PROPERTY LINES
	PROPERTY LINES (PLATTING)
	SECTION LINE
	EXISTING OVERHEAD POWER
	EXISTING COMMUNICATION
	EXISTING UNDERGROUND ELECTRIC
	EXISTING FIBER OPTIC
	EXISTING WATER LINE
	EXISTING SANITARY SEWER
	EXISTING STORM SEWER
	EXISTING GAS
F/C	EXISTING 8" LFG PIPELINE (DEMO)
	PROPOSED 8" LFG PIPELINE (LFG)
SS	FUTURE SANITARY SEWER
STS	FUTURE STORM SEWER
W	FUTURE WATER LINE
	EXISTING POWER POLE
	EXISTING LIGHT POLE
	EXISTING FIRE HYDRANT
	EXISTING WATER VALVE
	FUTURE FIRE HYDRANT
	FUTURE WATER TEE
	FUTURE WATER VALVE
	CONTOUR (MAJOR)
	CONTOUR (MINOR)
900	CONTOUR (MAJOR)
	CONTOUR (MAJOR)
	FUTURE PCC - CONCRETE SURFACING
	FUTURE PCC CURB AND GUTTER

GENERAL NOTES

1. THESE PLANS ARE GENERATED FROM THE NORTH DAKOTA DEPARTMENT OF TRANSPORTATION PROJECT NUMBER TMA-5-LFXPA-992(045) PCN 23537.
2. DRAWING FILES WERE PROVIDED BY HOUSTON ENGINEERING INC. NOT ALL EXISTING AND FUTURE UTILITIES ARE SHOWN. REFER TO COMPLETE DRAWINGS.
3. THIS IS A STANDARD CIVIL SYMBOLOGY SHEET. ALL SYMBOLS ARE NOT NECESSARILY USED ON THIS PROJECT.
4. SCREENING OR SHADING OF WORK IS USED TO INDICATE EXISTING COMPONENTS OR TO DE-EMPHASIZE IMPROVEMENTS TO HIGHLIGHT SELECTED TRADE WORK. REFER TO CONTEXT OF EACH SHEET FOR USAGE.

HDR ENGINEERING, INC.
51 BROADWAY N.
FARGO, ND 58102
(701) 315-4100

ISSUE	DATE	DESCRIPTION
-	03/26/2026	ISSUED FOR BIDDING

PROJECT MANAGER	RANDY HANSON
PROJECT NUMBER	[illegible]

PRELIMINARY
NOT FOR CONSTRUCTION
OR RECORDING

LANDFILL GAS PIPELINE REALIGNMENT
REALIGNMENT OF EXISTING LFG PIPELINE
TO ACCOMMODATE NEW UTILITIES

9TH STREET NE & 11TH AVE NE
WEST FARGO, ND

GENERAL CIVIL LEGEND & NOTES

FILE NAME G001.DWG
SCALE -

SHEET
G001

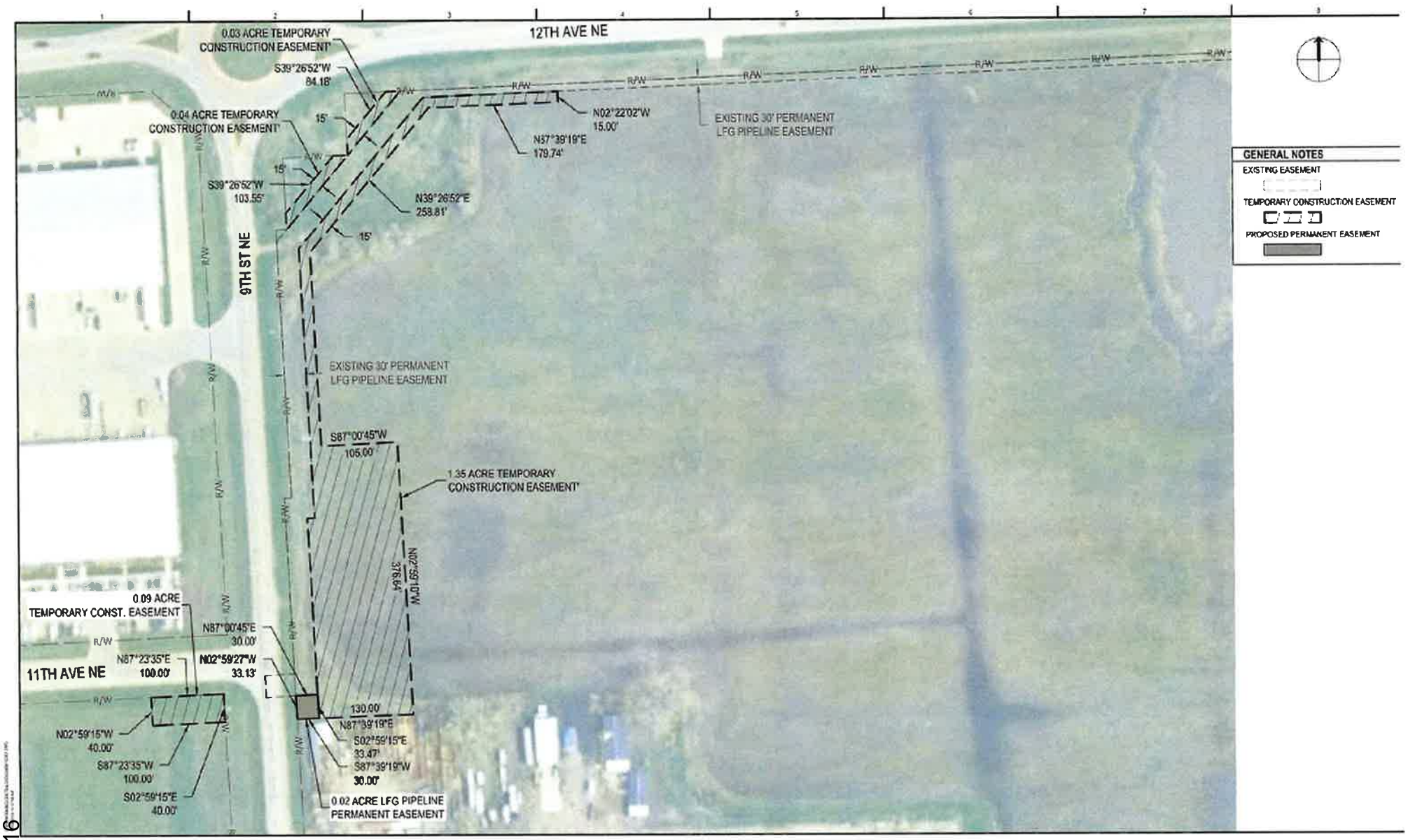

HDR

ISSUE	DATE	DESCRIPTION
-	03/26/2025	ISSUED FOR BIDDING

PROJECT MANAGER

PROJECT NUMBER

PRELIMINARY
NOT FOR CONSTRUCTION
OR RECORDING

LANDFILL GAS PIPELINE REALIGNMENT
REALIGNMENT OF EXISTING LFG PIPELINE
TO ACCOMMODATE NEW UTILITIES

9TH STREET NE & 11TH AVE NE
WEST FARGO, ND

TEMPORARY CONSTRUCTION EASEMENTS

FILE NAME G002.DWG
SCALE 1"=120'

SHEET
G002

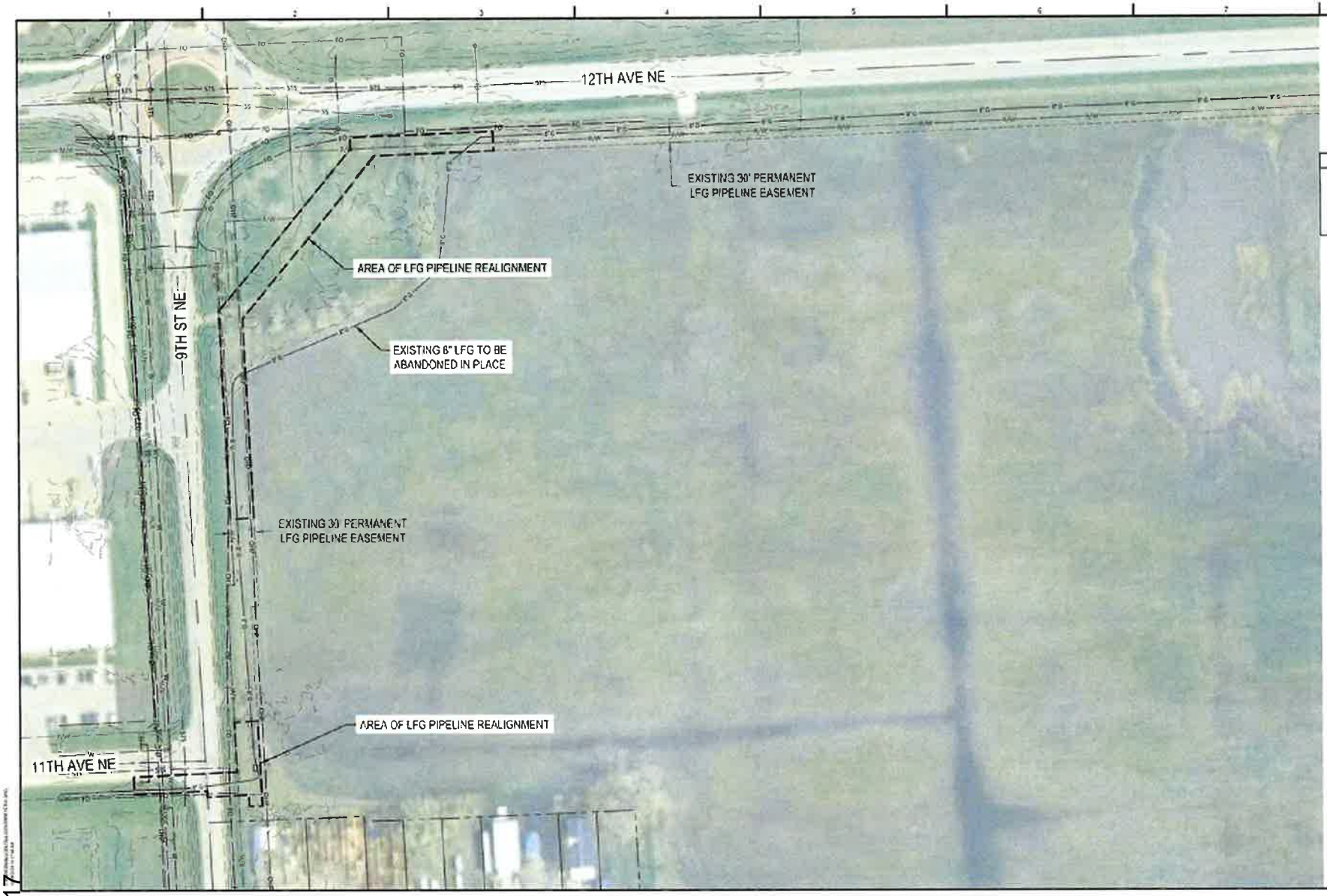

GENERAL NOTES

EXISTING BASE MAP REFERENCED FROM NORTH DAKOTA DEPARTMENT OF TRANSPORTATION PROJECT TMA-SU-FXP-8-992(45)/ PCN 23537 DATED 10/22/2025

HDR

HDR ENGINEERING, INC.
51 BROADWAY N
FARGO, ND 58102
(701) 363-4100

ISSUE	DATE	DESCRIPTION
	03/26/2026	ISSUED FOR BIDDING

PROJECT MANAGER: NANCY ANNON

PROJECT NUMBER: 10417102

PRELIMINARY
NOT FOR CONSTRUCTION
OR RECORDING

LANDFILL GAS PIPELINE REALIGNMENT
REALIGNMENT OF EXISTING LFG PIPELINE
TO ACCOMMODATE NEW UTILITIES

9TH STREET NE & 11TH AVE NE
WEST FARGO, ND

EXISTING CONDITIONS

FILE NAME: C100.DWG
SCALE: 1"=120'

SHEET
C100

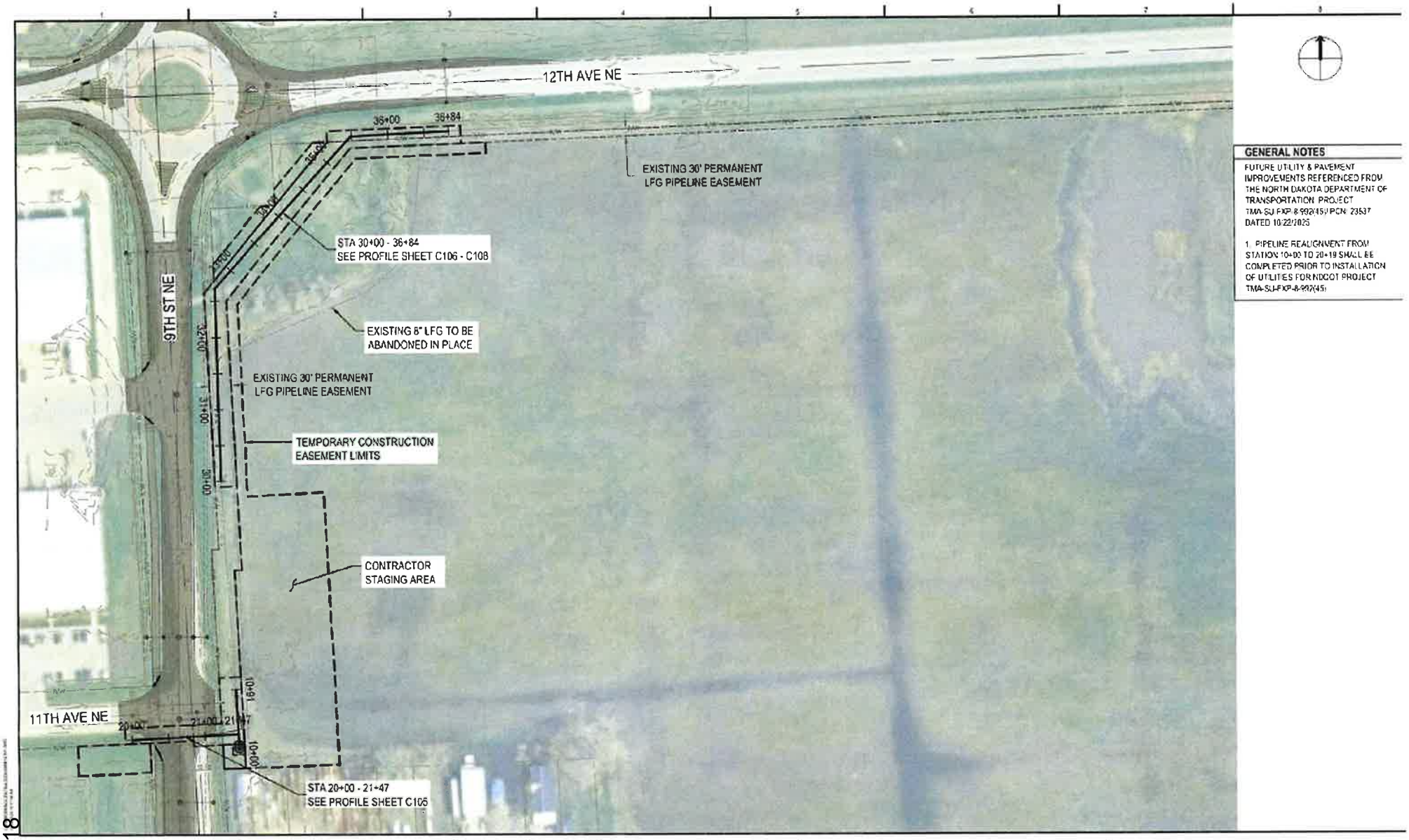

GENERAL NOTES

FUTURE UTILITY & PAVEMENT IMPROVEMENTS REFERENCED FROM THE NORTH DAKOTA DEPARTMENT OF TRANSPORTATION PROJECT TMA-SU-FXP-8-992(45) PCN: 23537 DATED 10/22/2025

1. PIPELINE REALIGNMENT FROM STATION 10+00 TO 20+19 SHALL BE COMPLETED PRIOR TO INSTALLATION OF UTILITIES FOR NDDOT PROJECT TMA-SU-FXP-8-992(45)

HDR ENGINEERING, INC.

ISSUE	DATE	DESCRIPTION
	03/26/2026	ISSUED FOR BIDDING

PROJECT MANAGER

PROJECT NUMBER

PRELIMINARY
NOT FOR CONSTRUCTION
OR RECORDING

LANDFILL GAS PIPELINE REALIGNMENT
REALIGNMENT OF EXISTING LFG PIPELINE
TO ACCOMMODATE NEW UTILITIES

9TH STREET NE & 11TH AVE NE
WEST FARGO, ND

SITE LAYOUT

FILE NAME
SCALE 1"=120'

SHEET
C101

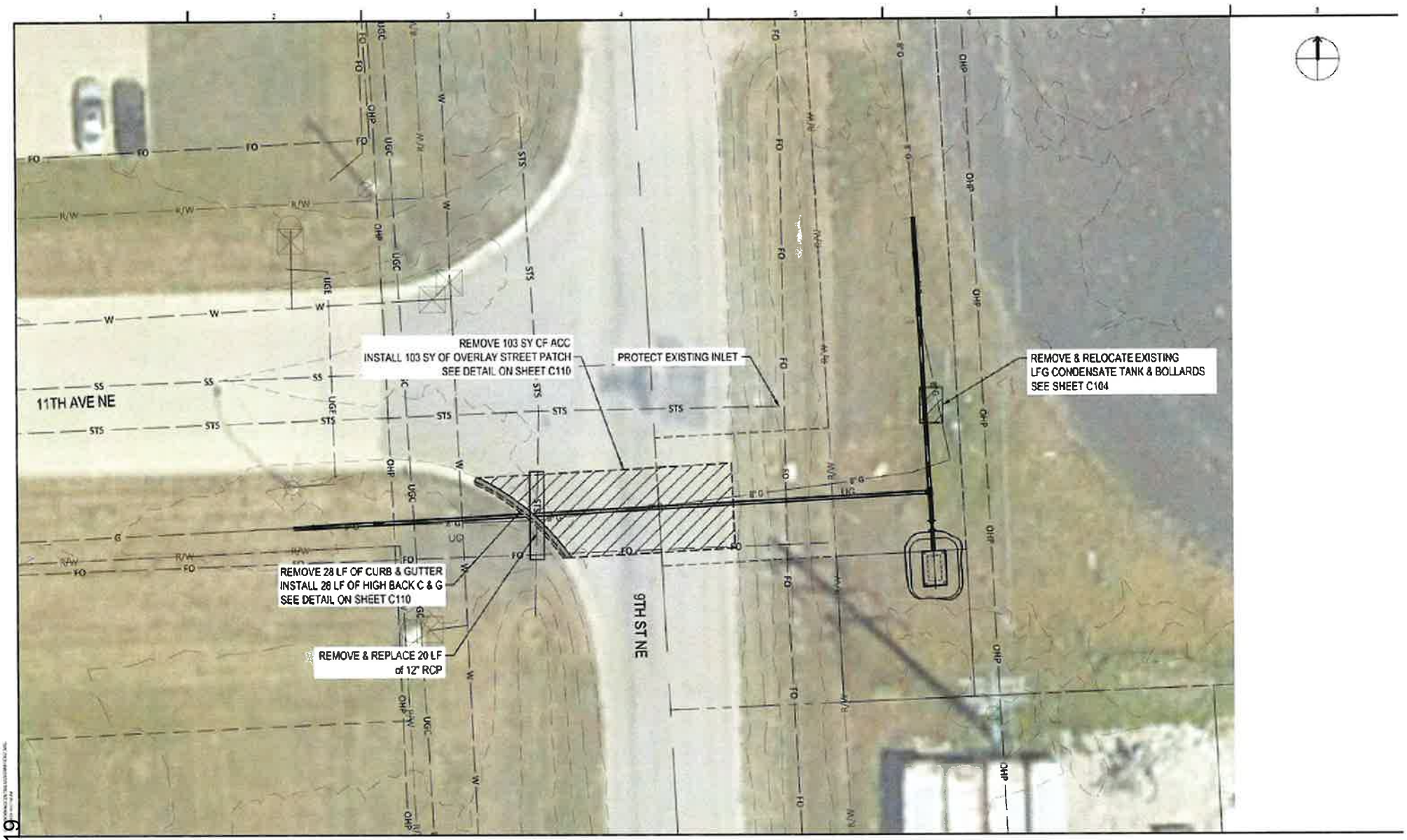

HDR

ISSUE	DATE	DESCRIPTION
	03/26/2025	ISSUED FOR BIDDING

PROJECT MANAGER

PROJECT NUMBER

PRELIMINARY
NOT FOR CONSTRUCTION
OR RECORDING

LANDFILL GAS PIPELINE REALIGNMENT
REALIGNMENT OF EXISTING LFG PIPELINE
TO ACCOMMODATE NEW UTILITIES

9TH STREET NE & 11TH AVE NE
WEST FARGO, ND

SITE DEMOLITION PLAN

FILE NAME C102.DWG
SCALE 1"=120'

SHEET
C102

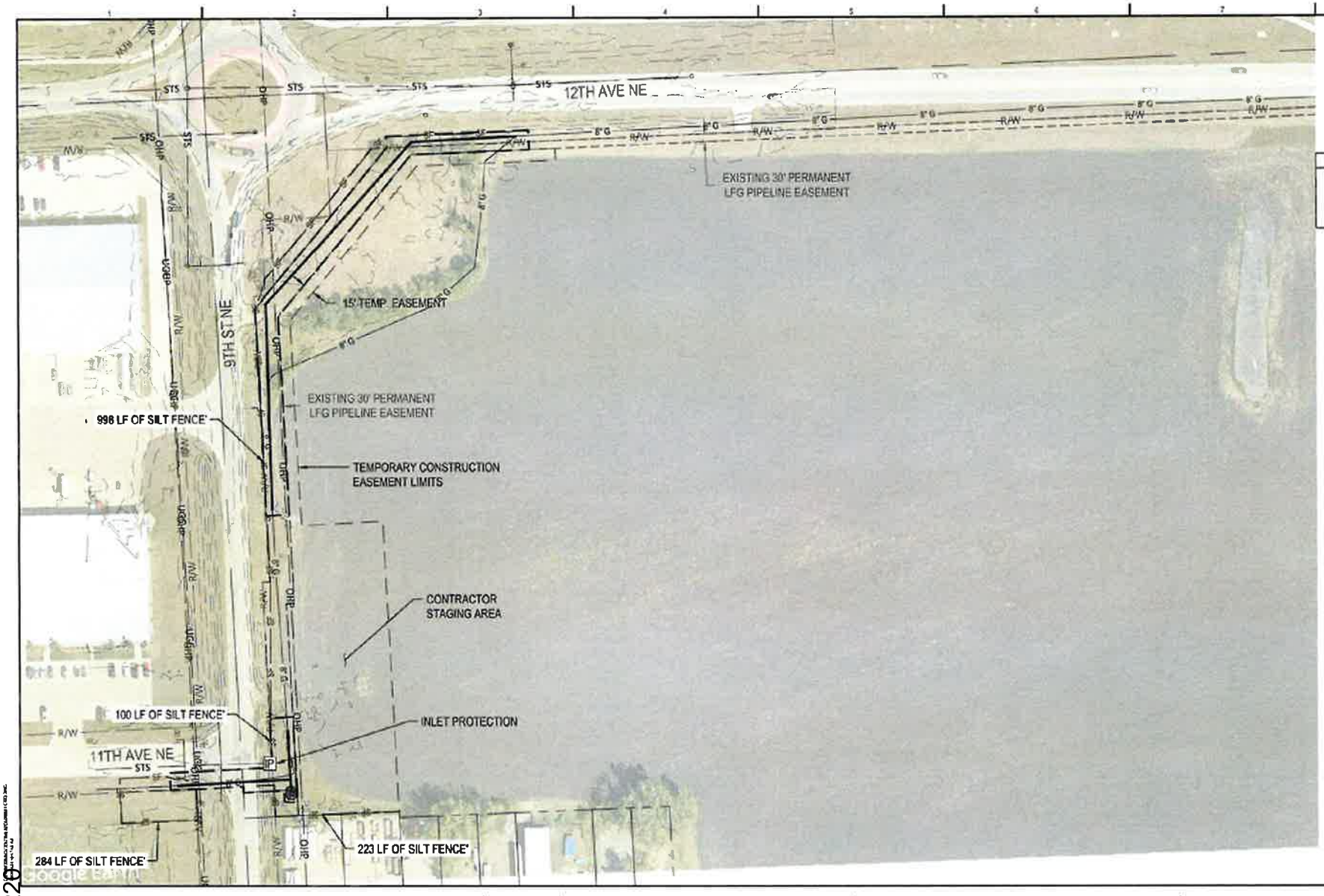

GENERAL NOTES

1. SEE EROSION CONTROL DETAILS ON SHEET C111
2. HYDROSEED DISTURBED AREAS

HDR ENGINEERING, INC

ISSUE	DATE	DESCRIPTION
-	03/19/2020	ISSUED FOR BIDDING

PROJECT MANAGER

PROJECT NUMBER

PRELIMINARY
NOT FOR CONSTRUCTION OR RECORDING

LANDFILL GAS PIPELINE REALIGNMENT
REALIGNMENT OF EXISTING LFG PIPELINE TO ACCOMMODATE NEW UTILITIES

9TH STREET NE & 11TH AVE NE
WEST FARGO, ND

SITE EROSION CONTROL PLAN

FILE NAME C103.DWG
SCALE 1"=120'

SHEET C103

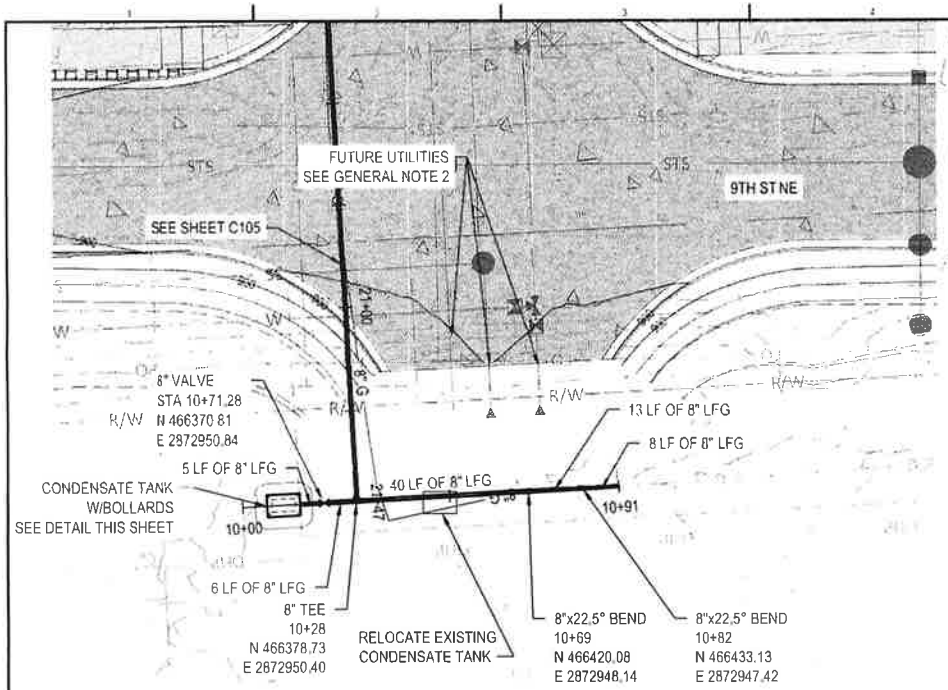

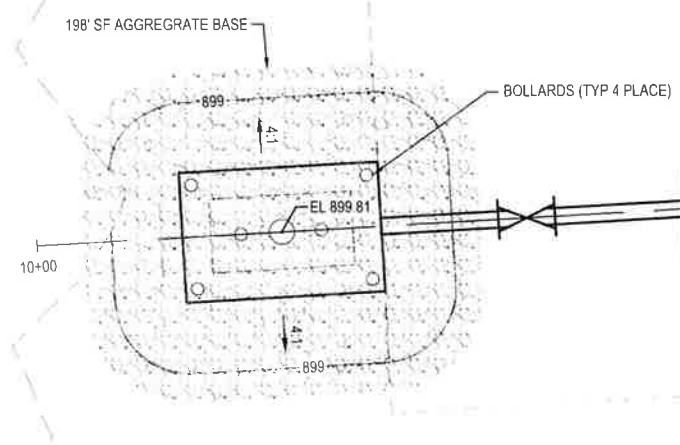

PROPOSED CONDENSATE TANK SITE

Scale: 1:5

GENERAL NOTES

1. EXISTING CONDENSATE TANK TO BE RELOCATED. CONTRACTOR TO ADD EXTENSIONS TO THE THREE RISERS AS NEEDED TO ALLOW RISERS TO TERMINATE 3.5' ABOVE EXISTING GRADE. EXTENSIONS SHALL BE ADDED TO THE HDPE PORTION OF THE RISER PIPE AND THE STEEL PORTION OF PIPE TO BE REUSED FOR ABOVE GRADE PORTION OF RISER.

2. MINIMUM 3' SEPARATION BELOW FUTUR UTILITIES PER NORTH DAKOTA DEPARTMENT OF TRANSPORTATION PROJECT TMA-SU-FXP-8-992(45)/ PCN. 2353 DATED 10/22/2025

3. CONTRACTOR TO VERIFY LOCATION AN ELEVATION OF EXISTING LANDFILL GAS PIPELINE AT TIE-IN LOCATIONS.

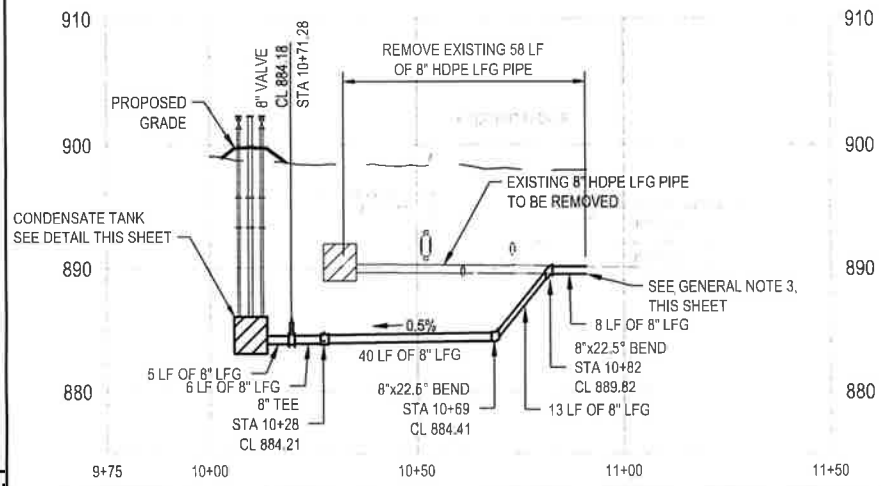

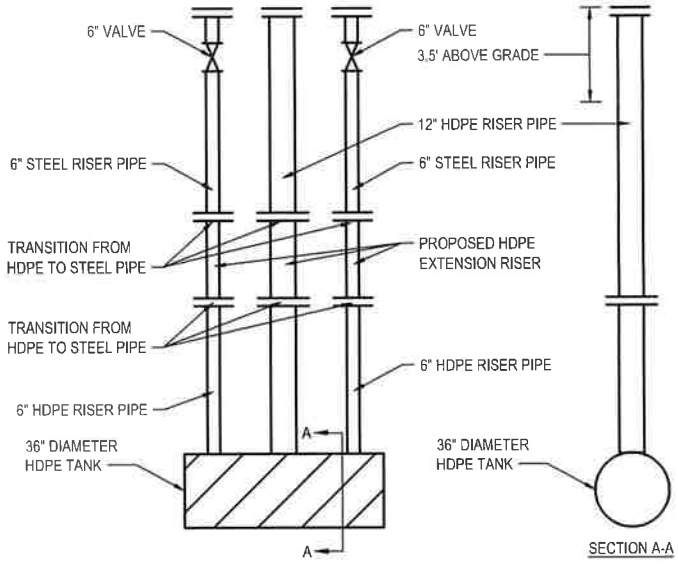

EXISTING CONDENSATE TANK

Scale: 1:5

HDR ENGINEERING INC.
51 BROADWAY N.
FARGO, ND 58102
(701) 353-6100

ISSUE	DATE	DESCRIPTION
	03/26/2026	ISSUED FOR BIDDING

PROJECT MANAGER: RANDY HANSON
PROJECT NUMBER: 1391-0101

PRELIMINARY
NOT FOR CONSTRUCTION
OR RECORDING

LANDFILL GAS PIPELINE REALIGNMENT
REALIGNMENT OF EXISTING LFG PIPELINE
TO ACCOMMODATE NEW UTILITIES

9TH STREET NE & 11TH AVE NE
WEST FARGO, ND

9th STREET NE LFG REALIGNMENT
PLAN & PROFILE

FILE NAME: C104.DWG
SCALE: 1"=30'
0 15 30

SHEET
C104

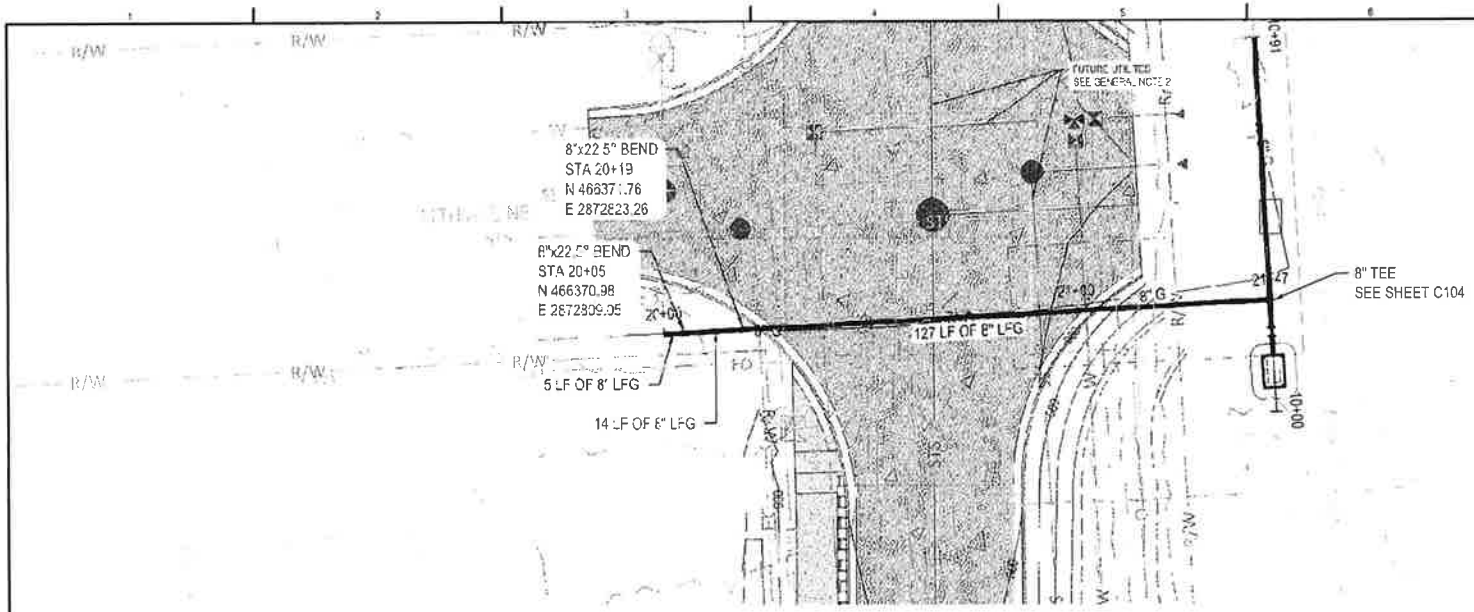

GENERAL NOTES

1. PROPOSED 8" HDPE LFG PIPE WITH CLASS 5 GRAVEL BACKFILL BENEATH FUTURE PAVEMENT.
2. MINIMUM 3' SEPARATION BELOW FUTURE STORM STORM SEWER PER NORTH DAKOTA DEPARTMENT OF TRANSPORTATION PROJECT TMA-SU-FXP-8-992(45)/ PCN: 23537 DATED 10/22/2025
3. CONTRACTOR TO VERIFY LOCATION AND ELEVATION OF EXISTING LANDFILL GAS PIPELINE AT TIE-IN LOCATIONS.
4. ALL PIPE TO BE HDPE SDR 17
5. ALL FITTINGS TO BE HDPE ELECTROFUSION

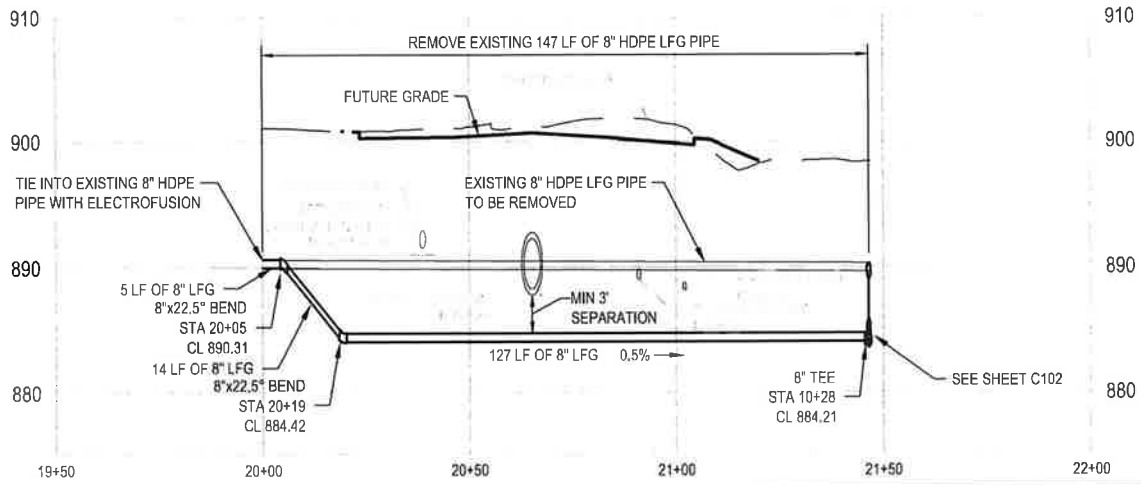

HDR

HDR ENGINEERING, INC.
51 BROADWAY N.
FARGO, ND 58102
(701) 354-7100

ISSUE	DATE	DESCRIPTION
	03/26/2026	ISSUED FOR BIDDING

PROJECT MANAGER: RANDY HANSON

PROJECT NUMBER: 1394.0003

PRELIMINARY
NOT FOR CONSTRUCTION
OR RECORDING

LANDFILL GAS PIPELINE REALIGNMENT
REALIGNMENT OF EXISTING LFG PIPELINE TO ACCOMMODATE NEW UTILITIES

9TH STREET NE & 11TH AVE NE
WEST FARGO, ND

11th AVE NE LFG REALIGNMENT
PLAN & PROFILE

FILE NAME: C105.DWG
SCALE: 1"=30'
0 15 30

SHEET
C105

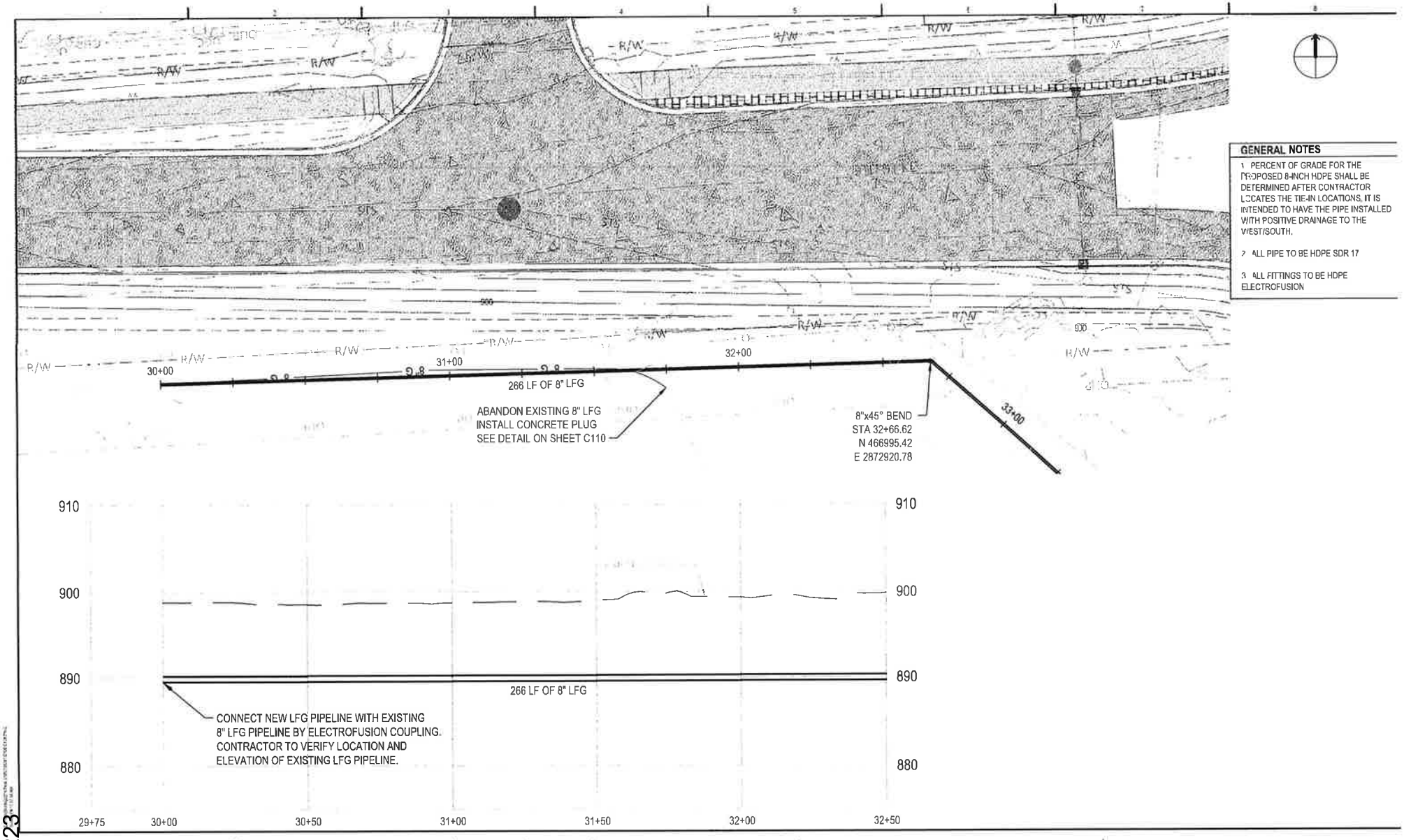

GENERAL NOTES

1. PERCENT OF GRADE FOR THE PROPOSED 8-INCH HDPE SHALL BE DETERMINED AFTER CONTRACTOR LOCATES THE TIE-IN LOCATIONS. IT IS INTENDED TO HAVE THE PIPE INSTALLED WITH POSITIVE DRAINAGE TO THE WEST/SOUTH.
2. ALL PIPE TO BE HDPE SDR 17
3. ALL FITTINGS TO BE HDPE ELECTROFUSION

HDR ENGINEERING INC
51 BROADWAY N.
FARGO ND 58102
(701) 232-8700

ISSUE	DATE	DESCRIPTION
	03/26/2026	ISSUED FOR BIDDING

PROJECT MANAGER: RANDY HANSEN
PROJECT NUMBER: 10014503

PRELIMINARY
NOT FOR CONSTRUCTION
OR RECORDING

LANDFILL GAS PIPELINE REALIGNMENT
REALIGNMENT OF EXISTING LFG PIPELINE
TO ACCOMMODATE NEW UTILITIES

9TH STREET NE & 11TH AVE NE
WEST FARGO, ND

LFG REALIGNMENT
PLAN & PROFILE

FILE NAME: C106-C108.DWG
SCALE: 1"=30'
0 15 30

SHEET
C106

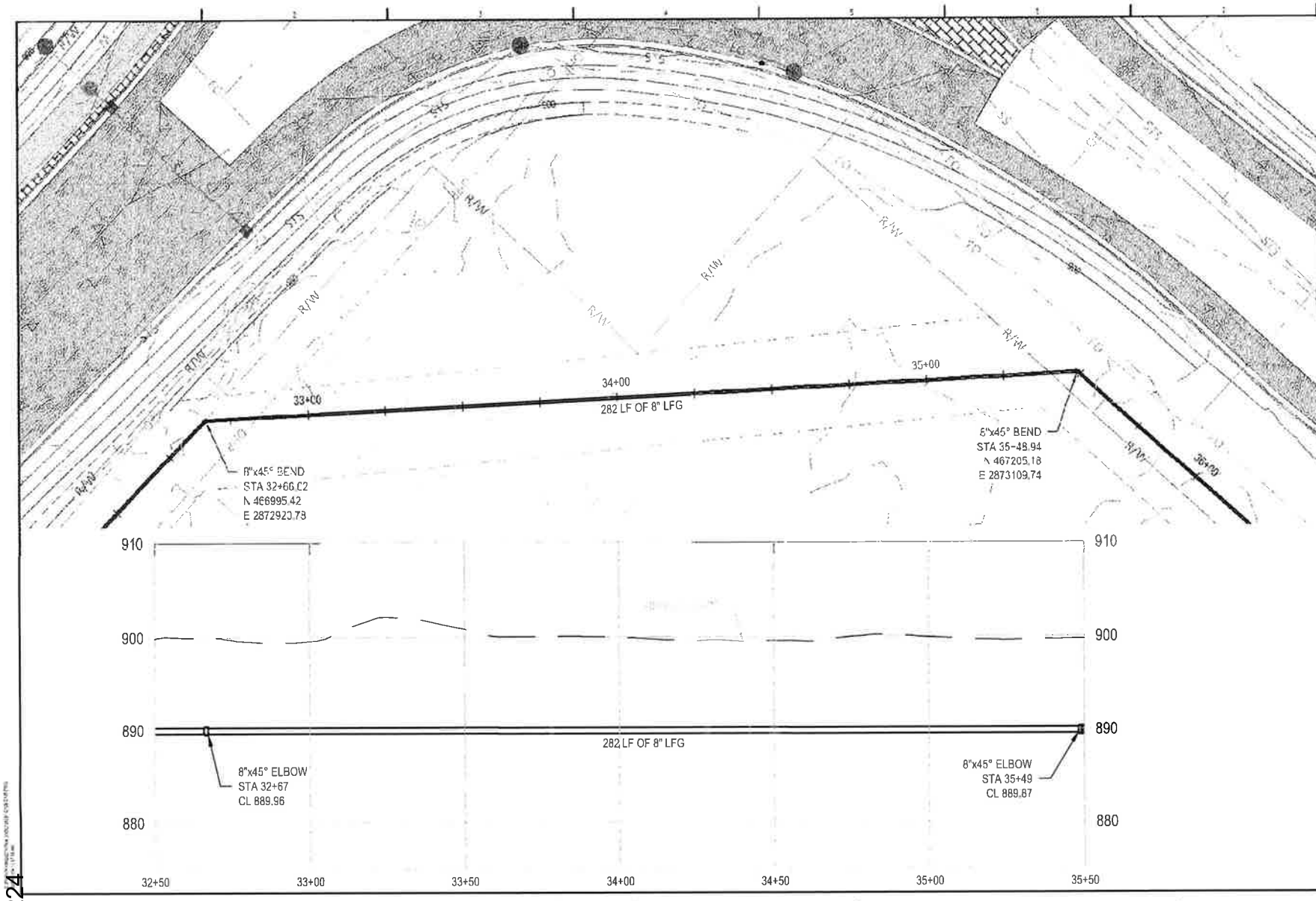

GENERAL NOTES

1. PERCENT OF GRADE FOR THE PROPOSED 8-INCH HDPE SHALL BE DETERMINED AFTER CONTRACTOR LOCATES THE TIE-IN LOCATIONS. IT IS INTENDED TO HAVE THE PIPE INSTALLED WITH POSITIVE DRAINAGE TO THE WEST/SOUTH.
2. ALL PIPE TO BE HDPE SDR 17
3. ALL FITTINGS TO BE HDPE ELECTROFUSION

HDR

HDR ENGINEERING, INC.
51 BROADWAY N.
FARGO, ND 58102
(701) 293-8100

ISSUE	DATE	DESCRIPTION
	03/26/2026	ISSUED FOR BIDDING

PROJECT MANAGER: RANDY HANSON

PROJECT NUMBER: 10344865

PRELIMINARY
NOT FOR CONSTRUCTION
OR RECORDING

LANDFILL GAS PIPELINE REALIGNMENT
REALIGNMENT OF EXISTING LFG PIPELINE
TO ACCOMMODATE NEW UTILITIES

9TH STREET NE & 11TH AVE NE
WEST FARGO, ND

LFG REALIGNMENT
PLAN & PROFILE

FILE NAME: C106-C108.DWG
SCALE: 1"=30'
0 15 30

SHEET
C107

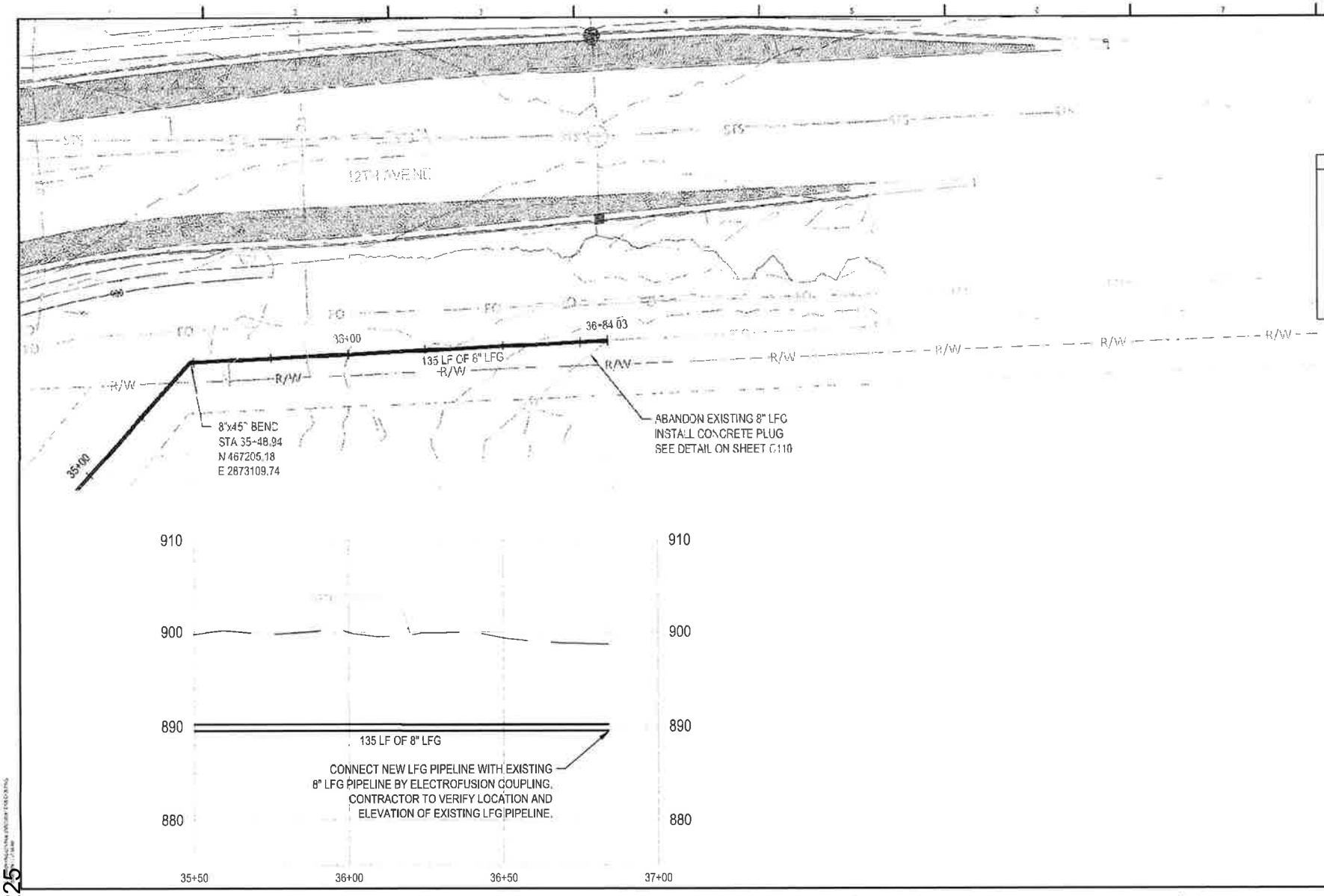

GENERAL NOTES

1. PERCENT OF GRADE FOR THE PROPOSED 8-INCH HDPE SHALL BE DETERMINED AFTER CONTRACTOR LOCATES THE TIE-IN LOCATIONS. IT IS INTENDED TO HAVE THE PIPE INSTALLED WITH POSITIVE DRAINAGE TO THE WEST/SOUTH.
2. ALL PIPE TO BE HDPE SDR 17
3. ALL FITTINGS TO BE HDPE ELECTROFUSION

HDR ENGINEERING, INC.
51 BROADWAY N.
FARGO, ND 58102
(701) 353-8100

ISSUE	DATE	DESCRIPTION
	03/26/2026	ISSUED FOR BIDDING EW

PROJECT MANAGER: RANDY HANSON
PROJECT NUMBER: 13449-001

PRELIMINARY
NOT FOR CONSTRUCTION
OR RECORDING

LANDFILL GAS PIPELINE REALIGNMENT
REALIGNMENT OF EXISTING LFG PIPELINE
TO ACCOMMODATE NEW UTILITIES

9TH STREET NE & 11TH AVE NE
WEST FARGO, ND

LFG REALIGNMENT
PLAN & PROFILE

FILE NAME: C106-C108.DWG
SCALE: 1"=30'
0 15 30

SHEET
C108

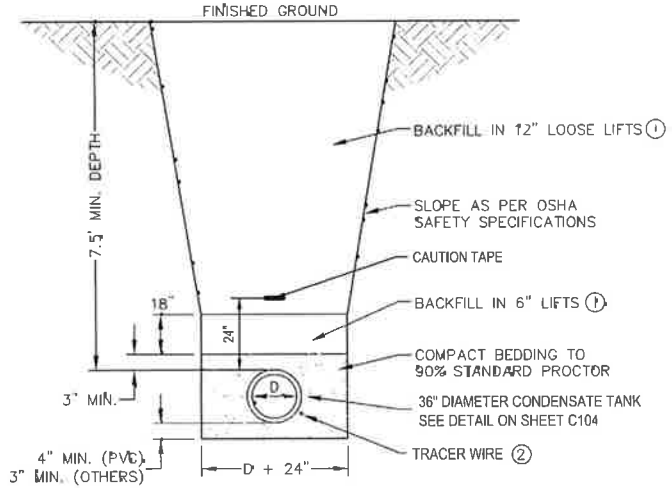

(1) COMPACT TO 95% MINIMUM STANDARD PROCTOR DENSITY.
(2) INSTALL TRACER WIRE PER SPECIFICATION.

TRENCH DETAIL
NO SCALE

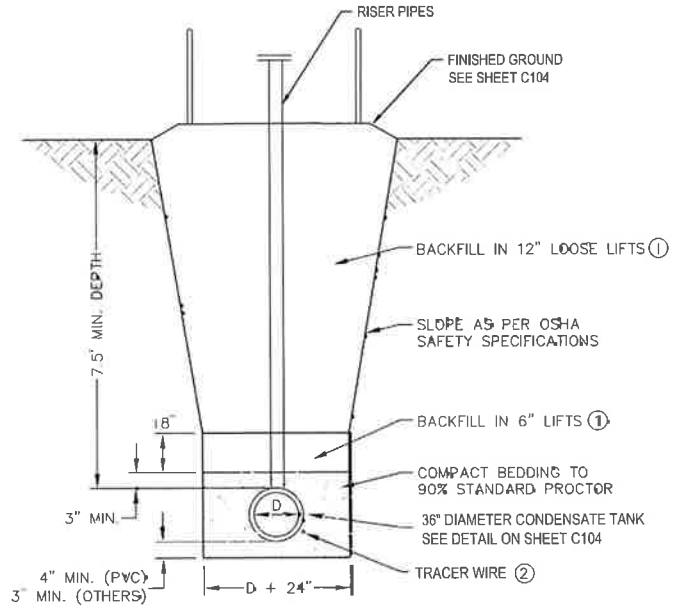

(1) COMPACT TO 95% MINIMUM STANDARD PROCTOR DENSITY.
(2) INSTALL TRACER WIRE PER SPECIFICATION.

LFG CONDENSATE TANK TRENCH DETAIL
NO SCALE

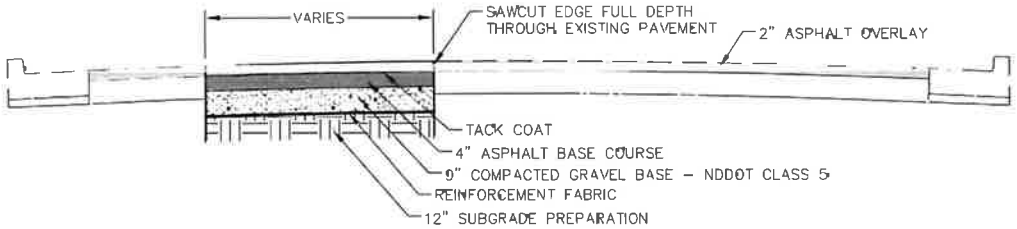

OVERLAY STREET PATCH - ASPHALT SURFACE
NO SCALE

HDR ENGINEERING, INC
51 BROADWAY N.
FARGO, ND 58102
(701) 353-6100

ISSUE	DATE	DESCRIPTION
	03/24/2026	ISSUED FOR BIDDING

PROJECT MANAGER
PROJECT NUMBER

PRELIMINARY
NOT FOR CONSTRUCTION OR RECORDING

LANDFILL GAS PIPELINE REALIGNMENT
REALIGNMENT OF EXISTING LFG PIPELINE TO ACCOMMODATE NEW UTILITIES
9TH STREET NE & 11TH AVE NE
WEST FARGO, ND

CIVIL DETAILS

FILE NAME | C109-C110.DWG
SCALE | *

SHEET
C109

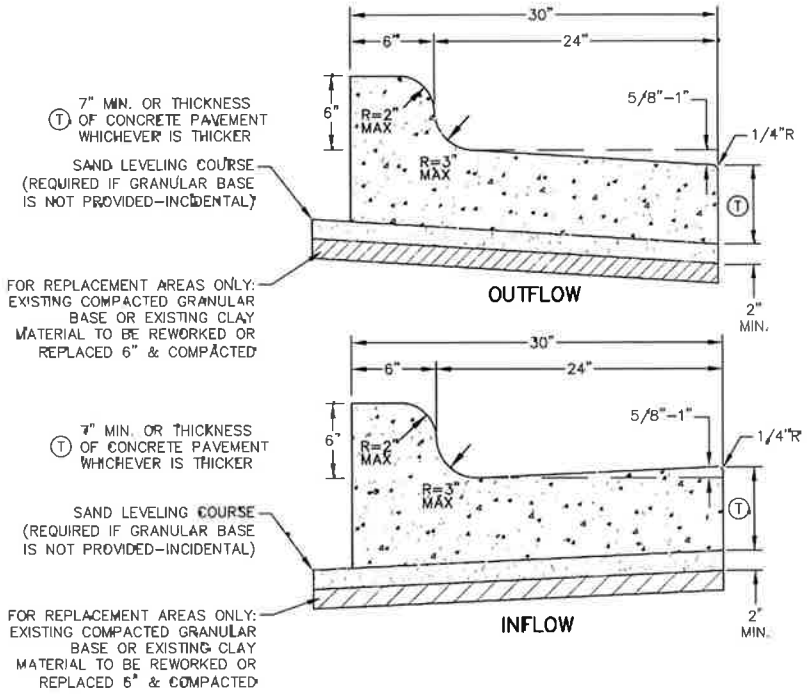

HIGH BACK CURB AND GUTTER

NO SCALE

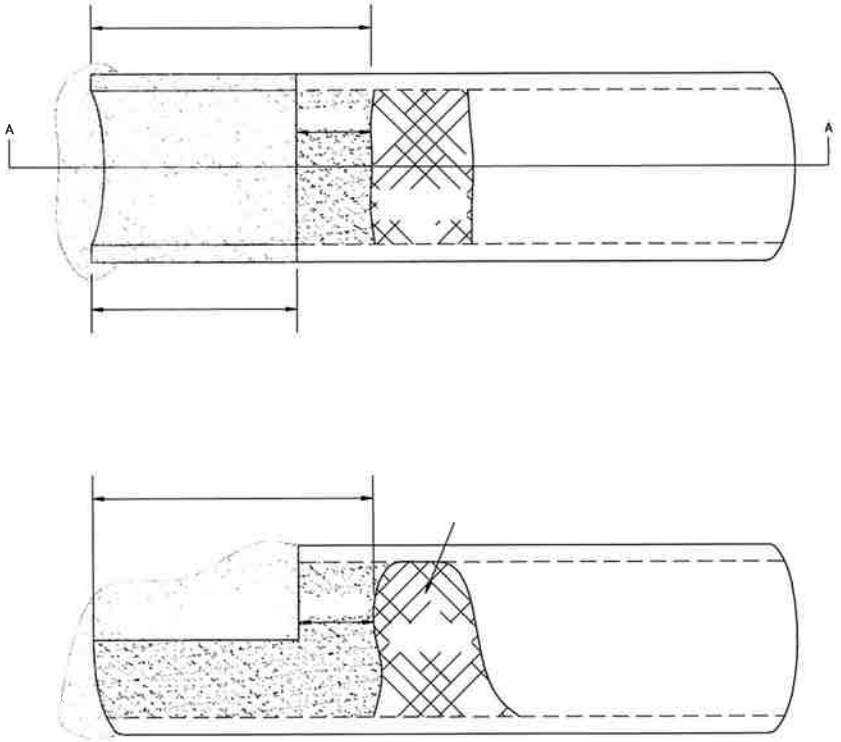

CONCRETE PLUG

NO SCALE

HDR ENGINEERING, INC.
51 BROADWAY N.
FARGO, ND 58102
(701) 353-4100

ISSUE	DATE	DESCRIPTION
	03/26/2026	ISSUED FOR BIDDING

PROJECT MANAGER: RANDY HANSON

PROJECT NUMBER:

PRELIMINARY
NOT FOR CONSTRUCTION
OR RECORDING

LANDFILL GAS PIPELINE REALIGNMENT
REALIGNMENT OF EXISTING LFG PIPELINE
TO ACCOMMODATE NEW UTILITIES

9TH STREET NE & 11TH AVE NE
WEST FARGO, ND

CIVIL DETAILS

FILE NAME: C109-C110.DWG
SCALE: -

SHEET: C110

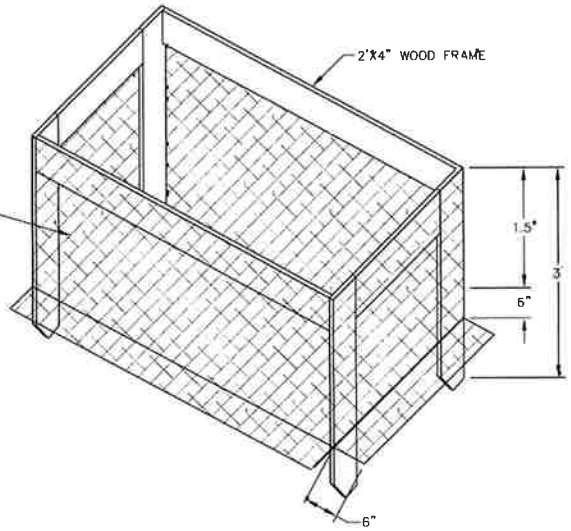

INLET PROTECTION TYPE A-2

NO SCALE *EROSION CONTROL 03.01.22*

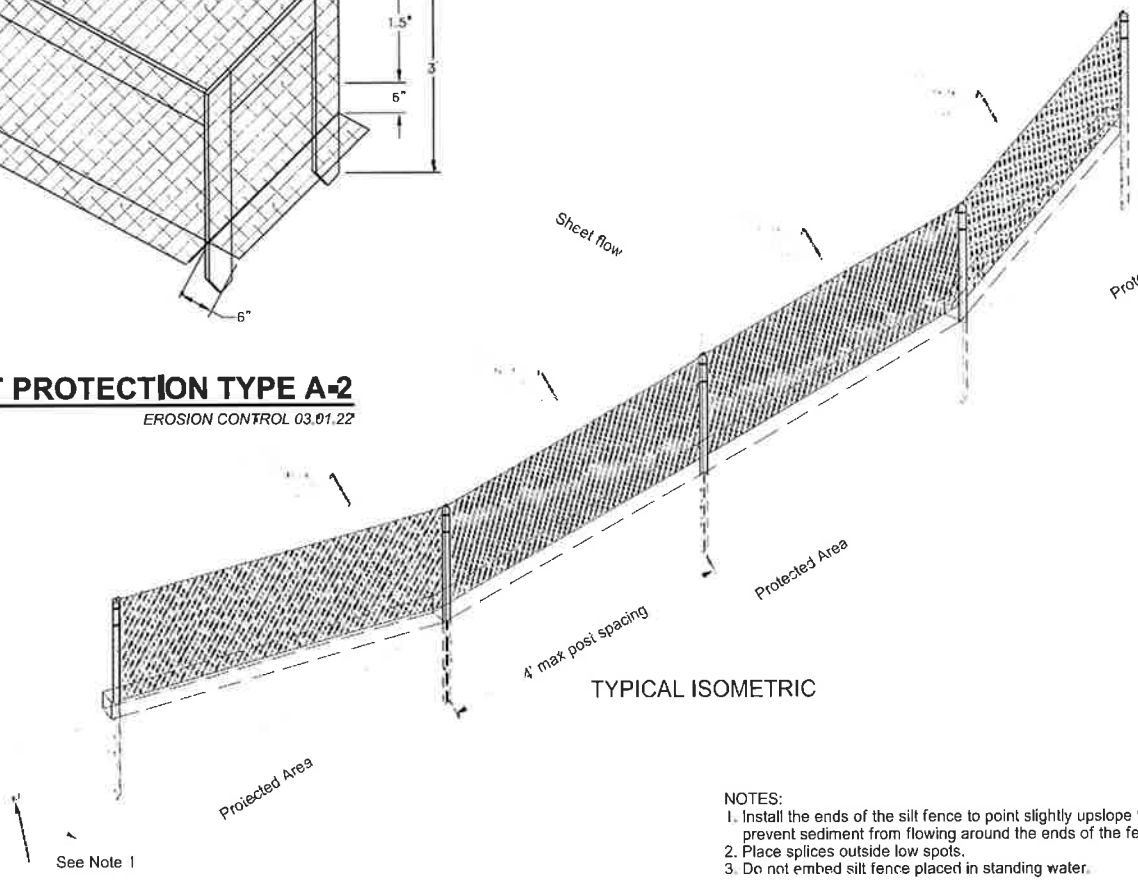

TYPICAL ISOMETRIC

NOTES:
1. Install the ends of the silt fence to point slightly upslope to prevent sediment from flowing around the ends of the fence.
2. Place splices outside low spots.
3. Do not embed silt fence placed in standing water.

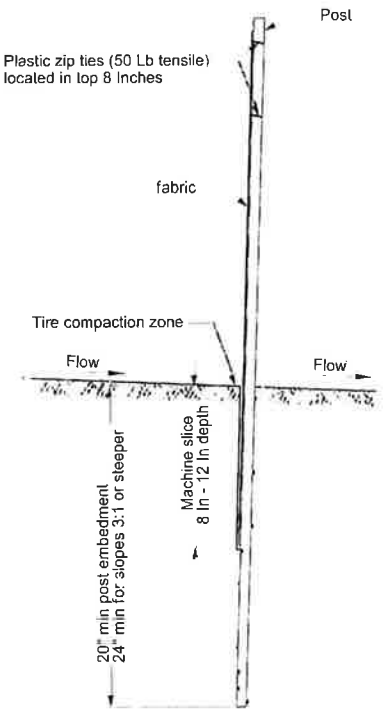

MACHINE SLICED INSTALLATION DETAIL

EROSION AND SILTATION CONTROLS - SILT FENCE

HDR ENGINEERING, INC.
51 BROADWAY N.
FARGO, ND 58102
(701) 353-4100

ISSUE	DATE	DESCRIPTION
	03/28/2026	ISSUED FOR BIDDING

PROJECT MANAGER: RANDY HANSON
PROJECT NUMBER: 10442ND

PRELIMINARY
NOT FOR CONSTRUCTION
OR RECORDING

LANDFILL GAS PIPELINE REALIGNMENT
REALIGNMENT OF EXISTING LFG PIPELINE TO ACCOMMODATE NEW UTILITIES

9TH STREET NE & 11TH AVE NE
WEST FARGO, ND

CIVIL DETAILS

FILE NAME: C109-C110.DWG
SCALE: -

SHEET: C111

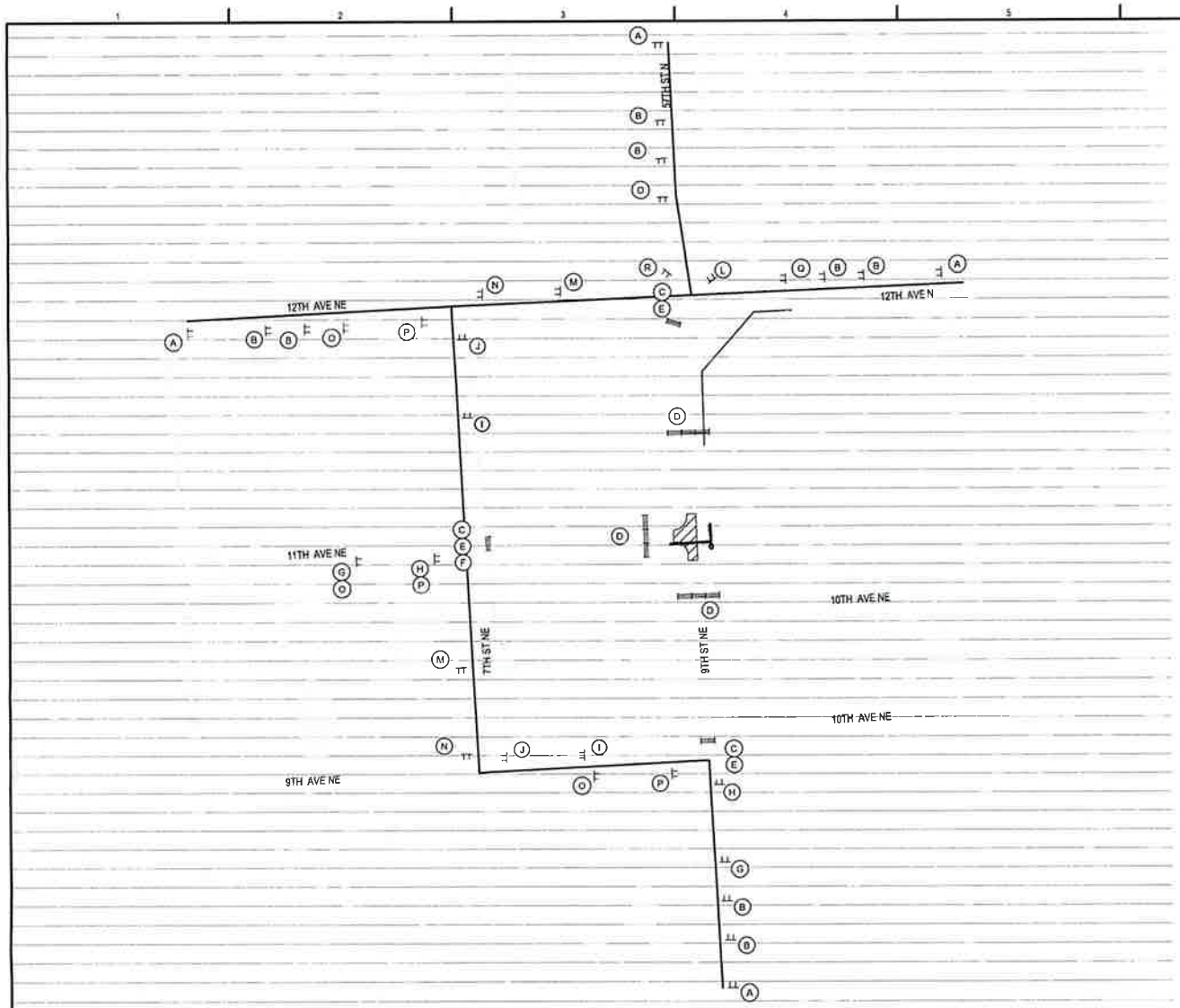

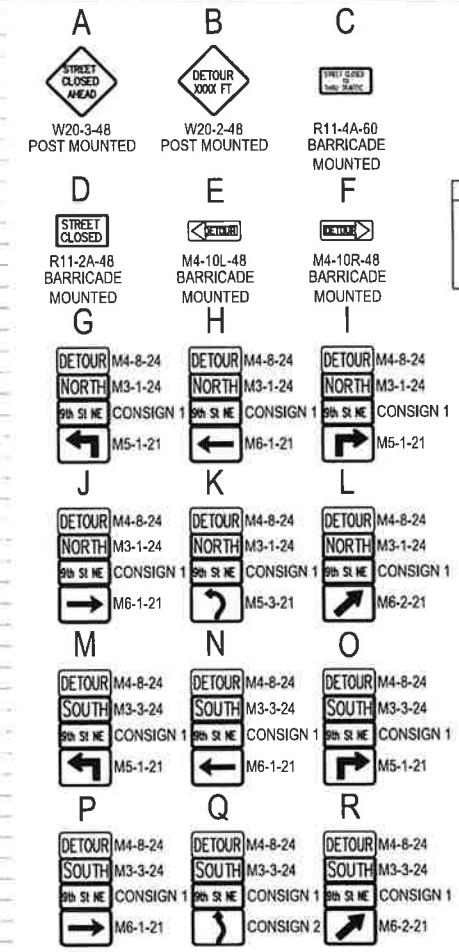

GENERAL NOTES

1. CONTRACTOR SHALL COORDINATE TRAFFIC CONTROL MEASURES WITH THE 9TH STREET PROJECT CONTRACTOR.

TYPE III BARRICADE

SIGN

Work Zone

Detour Route

HDR ENGINEERING, INC.
51 BROADWAY N.
FARGO, ND 58102
(701) 353-6100

ISSUE	DATE	DESCRIPTION
	03/26/2026	ISSUED FOR BIDDING

PROJECT MANAGER: RANDY HANSON

PROJECT NUMBER: 10MAF003

PRELIMINARY
NOT FOR CONSTRUCTION
OR RECORDING

LANDFILL GAS PIPELINE REALIGNMENT
REALIGNMENT OF EXISTING LFG PIPELINE TO ACCOMMODATE NEW UTILITIES

9TH STREET NE & 11TH AVE NE
WEST FARGO, ND

TRAFFIC CONTROL PLAN

FILE NAME: TR101.DWG
SCALE: 1"=400'

SHEET: **TR101**

THE CITY OF Fargo FAR MORE | WATER

27

WATER TREATMENT FACILITY
435 14th Avenue South
Fargo, ND 58103
Office: 701.241.1469
FargoND.gov

November 18, 2026

Honorable Board of
City Commissioners
City of Fargo
225 4th St. N
Fargo, ND 58102

Dear Commissioners:

Attached please find a tabulation sheet from **ITB27009** listing all qualified bids received for supplying chemicals to the Water Treatment Plant for 2027. Listed below are the lowest and/or best value bids received for each of the chemicals:

ITB27009	Water Treatment Plant Chemical Bid Results	
Product Name	**Vendor**	**Unit Price**
Aluminum Sulfate	Hawkins, Inc.	$0.2225 / pound
Anhydrous Ammonia	Hawkins, Inc.	$3.35 / pound
Citric Acid, 50%	ShannonChemical Corp.	$0.897 / pound
Hydrofluosilicic Acid	Hawkins, Inc.	$0.70 / pound
Hydrogen Peroxide, 34%	Hawkins, Inc.	$0.59 / pound
Lime	Graymont (WI) LLC	$316.45 / ton
Liquid carbon Dioxide	Linde Inc.	$178.00 / ton
Liquid Chlorine	Hawkins, Inc.	$2,125.00 / ton
Liquid Oxygen	Linde Inc.	$181.64 / ton
Aluminum Chlorohydrate	Hawkins, Inc.	$0.6475 / pound
Polyphosphate	ShannonChemical Corp.	$1.73 / pound
Ferric Sulfate 60%	Hawkins, Inc.	$3.65 / gallon
Soda Ash	DuBois Chemicals, Inc.	$450.00 / ton
Sodium Bisulfite, 38%	Hawkins, Inc.	$0.45 / pound
Sodium Hydroxide, 50%	Catalynt Solutions, Inc.	$0.2358 / pound
Sodium Hypochlorite, 12.5%	Hawkins, Inc.	$0.34 / pound
Sulfuric Acid, 40% Totes	Hawkins, Inc.	$0.51 / pound
Sulfuric Acid, 93%	Hawkins, Inc.	$0.2594 / pound
Poly DADMAC 20	Hexagon Technologies	$1.69 / pound
Anionic Polyacrylamide	Sioux Valley Environmental	$1.94 / pound
Acetic Acid 56	Hawkins, Inc.	$1.70 / pound
Anionic Flocculant	Sioux Valley Environmental	$1.43 / pound

The recommendation is to award the 2027 chemical bids as listed above.

The estimated chemical use for 2027 with bid results from ITB27009 reflect a 17.1% increase in costs compared to 2026.

Sincerely,

T. B. Hall

Troy B. Hall
Water Utility Director

Sincerely,

B A Ward

Brian A. Ward
Water Plant Superintendent

ITB27009

FARGO WATER TREATMENT PLANT
2027 ANNUAL CHEMICAL BIDDING SUMMARY OF QUALIFYING BIDS

Product Name	Vendor	Estimated Annual	Tons, lbs. or gallons	Unit Price $ per	Estimated Annual Cost	Payment Method	Recommendation
Aluminum Sulfate	Chemtrade	70,000	lbs	0.2669	$18,683.00	PO	
	Hawkins Inc.	70,000	lbs	0.2225	$15,575.00	PO	Accept
Anhydrous Ammonia	Hawkins, Inc.	60,000	lbs	3.35	$201,000.00	PO	Accept
Citric Acid, 50%	Hawkins, Inc.	42,000	lbs	0.916	$38,472.00	PO	
	Chemrite Inc.	42,000	lbs	0.941	$39,522.00	PO	
	Shannon Chemical Corp.	42,000	lbs	0.897	$37,674.00	PO	Accept
Hydrofluosilicic Acid	Hawkins Inc.	200,000	lbs	0.70	$140,000.00	PO	Accept
Hydrogen Peroxide, 34%	USP Technologies	72,000	lbs	0.72	$51,840.00	PO	
	Hawkins Inc.	72,000	lbs	0.59	$42,480.00	PO	Accept
Lime	Dubois Chemicals, Inc.	4,500	Tons	368.00	$1,656,000.00	PO	
	Graymont (WI) LLC	4,500	Tons	316.45	$1,424,025.00	PO	Accept
Liquid Carbon Dioxide	American Welding & Gas	650	Tons	195.00	$126,750.00	PO	
	Linde, Inc	650	Tons	178.00	$115,700.00	PO	Accept
Liquid Chlorine	Hawkins	135	Tons	2,125.00	$286,875.00	PO	Accept
Liquid Oxygen	American Welding & Gas	400	Tons	212.08	$84,832.00	PO	
	Linde	400	Tons	181.64	$72,656.00	PO	Accept
Aluminum Chlorohydrate	Chemtrade	2,300,000	lbs	0.75	$1,725,000.00	PO	
	Hawkins	2,300,000	lbs	0.6475	$1,489,250.00	PO	Accept
	USALCO, LLC	2,300,000	lbs	0.845	$1,943,500.00	PO	
Polyphosphate	Shannon Chemical Corp.	110,000	lbs	1.73	$190,300.00	PO	Accept
	Carus	110,000	lbs	1.77	$194,700.00	PO	
Ferric Sulfate 60%	Chemtrade	140,000	gallons	5.6259	$787,626.00	PO	
	Hawkins Inc.	140,000	gallons	3.65	$511,000.00	PO	Accept
Soda Ash	Killoran T&B, Inc.	1,300	Tons	519.00	$674,700.00	PO	
	Dubois Chemicals, Inc.	1,300	Tons	450.00	$585,000.00	PO	Accept
Sodium Bisulfite, 38%	Hawkins, Inc.	50,000	lbs	0.45	$22,500.00	PO	Accept
Sodium Hydroxide, 50%	Catalynt Solutions, Inc.	1,300,000	lbs	0.2358	$306,540.00	PO	Accept
	Hawkins, Inc.	1,300,000	lbs	0.26	$338,000.00	PO	
Sodium Hypochlorite, 12.5%	Hawkins Inc.	100,000	lbs	0.34	$34,000.00	PO	Accept
Sufuric Acid, 40% Totes	Hawkins, Inc.	20,000	lbs	0.51	$10,200.00	PO	Accept
Sulfuric Acid, 93%	Hawkins Inc.	1,600,000	lbs	0.2594	$415,040.00	PO	Accept
Poly DADMAC 20	Hexagon Technologies	20,000	lbs	1.69	$33,800.00	PO	Accept
Anionic Polyacrylamide	Sioux Valley Environmental	6,600	lbs	1.94	$12,804.00	PO	Accept
Acetic Acid 56	Hawkins Inc.	2,250	lbs	1.70	$3,825.00	PO	Accept
Anionic Flocculant	Sioux Valley Environmental	60,000	lbs	1.43	$85,800.00	PO	Accept

2027 Estimated Chemical Cost of Bid Chemicals = $6,036,044.00

The recommendation is to accept bid chemicals as listed above.