Guide for Single Family Residential Construction

CITY OF FARGO
BUILDING INSPECTION DEPARTMENT

The State of North Dakota requires that you call *1-800-795-0555* at least two business days before you dig.

This handout does not address any covenants or easements assigned to the property, nor does it relieve you of code compliance with items from the International Residential Code (IRC) that may not have been included.

Common Permit Questions

IS A BUILDING PERMIT REQUIRED?

YES! Before any work is started you must acquire a building permit.

WHY SHOULD I GET A PERMIT?

To ensure your garage/home is constructed properly to safeguard your property; to protect yourself; to establish a record of construction or remodeling history on your property; and, to provide some protection from claims by subsequent property owners.

WHAT IS NEEDED TO GET A PERMIT?

The address and the zoning of the property; the intended use of the property (if uses other than residential are anticipated); the estimated cost of construction of the project; and, a site plan showing the size and location of all existing buildings on your property along with the proposed project. Also, basic construction drawings are often helpful. Basic construction drawings must include the truss design(s) that will be used in your construction.

HOW LONG DOES IT TAKE TO GET A PERMIT?

Generally one (1) hour, depending upon the information provided and the complexity of the project.

ARE INSPECTIONS REQUIRED?

YES! It is the responsibility of the permit holder to arrange for inspections. This would include foundation, framing, electrical, heating, and a final inspection. Inspections are part of the permit process. Building inspections consist of examining and evaluating construction to determine if the work is compatible with the accepted standard of construction. There is no additional charge for inspections.

Definitions

Foundations:	The foundation must be constructed of masonry, concrete, or treated wood and shall extend below the frost line.
Garage Floor:	Where motor vehicles are stored, floor surfaces shall be constructed of noncombustible materials.
Lot Coverage:	The percentage of the area of the lot that is allowed to be covered by the main buildings and all accessory buildings within a specified zoning district.
Property Line:	A recorded boundary of a plot. It is the owner's responsibility to know where and how to locate the property lines. The City of Fargo assumes that the owner knows this information. Errors due to lack of property line knowledge will cause delays and additional expense.
Required:	Needed; essential; necessary
Yard:	An open space, other than a court, on the same lot with a building.
Yard, Front:	A yard extending across the full width of a lot and having a depth equal to the shortest distance between the front line of the lot and the nearest portion of the main building, including an enclosed or covered porch. Where a building line or other line for designation of future street width has been established, the front yard depth shall be measured from such line instead of from the front line of the lot.
Yard, Rear:	A yard extending across the full width of a lot and having a depth equal to the shortest distance between the rear line of the lot and the main building.
Yard, Side:	A yard between the side line of the lot and the main building extending from the front yard to the rear yard and having a width equal to the shortest distance between said side line and the main building.

Land Development Code Regulations

Article 20-05, Residential Dimensional Standards

Table 20-0501

Dimensional Standard	Zoning District										
	AG	**SR-0**	**SR-1**	**SR-2**	**SR-3**	**SR-4**	**SR-5** [9]	**MR-1**	**MR-2**	**MR-3**	**UMU**
Maximum/Minimum Density (UPA - Units per Acre)	0.1 Max.	1.0 Max.	2.9 Max.	5.4 Max.	8.7 Max.	12.1 Max.	14.5 Max.	16.0 Max.	20.0 Max.	24.0 [1] Max.	18.0 Min.
Minimum Lot Size											
Area (Sq. Ft.)	10 Ac	1 Ac [2]	15,000	8,000	5,000	3,600	3,000	5,000	5,000	5,000	2,420
Width (Ft.)	200	120	80	60	50[3]	34[3]	25	50[3]	50[3]	50[3]	50[3]
Minimum Setbacks (Ft.)											
Front	50[4]	50	35	30	20	15[5]	15[5]	25	25	25	10
Interior Side[6]	25	25	15%/15	10%/5	10%/5	4	4	15%/25	15%/25	10	5
Street Side	25[7]	25	17.5	15	12.5	10	10	12.5	12.5	12.5	10
Rear	50	50	25	25	15	15	15	20	20	20	15
Max. Building Coverage (Pct. of Lot)	NA	25	25	35	40	45	50	35[8]	35[8]	35[8]	75
Minimum Open Space (Pct. of Lot)	NA	NA	NA	NA	NA	NA	NA	35	35	35	NA
Maximum Height (Ft.)	35	35	35	35	35	35	35	35	45	60	60

Source: *2985 (1999), 3062 (1999), 4039 (2000), 4165 (2001), 4338(2003), 4695 (2009).*

[1] Higher densities may be allowed with the Bonus Density provisions of Sec. 20-0505.
[2] SR-0 minimum district size is 20 acres. See section 20-0203-A.
[3] Minimum lot width subject to limitation of access as provided in Section 20-0702.
[4] Minimum 100 feet from right-of-way on Arterial or section line road.
[5] Minimum 20-foot setback shall be provided between front-entry garages and nearest edge of sidewalk crossing plate.
[6] #/# = Percent of Lot Width/Feet (whichever is less)
[7] Minimum 75 feet from right-of-way on Arterial or section line road.

Section R302.5 - Dwelling/Garage Opening/Penetration Protection

R302.5.1 Opening protection. Openings from a private garage directly into a room used for sleeping purposes shall not be permitted. Other openings between the garage and residence shall be equipped with solid wood doors not less than 1 3/8 inches in thickness, solid or honeycomb core steel doors not less than 1 3/8 inches thick, or 20-minute fire-rated doors.

R302.5.2 Duct penetration. Ducts in the garage and ducts penetrating the walls or ceilings separating the dwelling from the garage shall be constructed of a minimum No. 26 gage sheet steel or other approved material and shall have no openings into the garage.

Section R302.6 - Dwelling/Garage Fire Separation

R302.6 Separation required. The garage shall be separated from the residence and its attic area by not less than 1/2 inch gypsum board applied to the garage side. Where the separation is a floor-ceiling assembly, the structure supporting this separation shall also be protected by not less than 1/2 inch gypsum board or equivalent.

Section R303 - Light, Ventilation and Heating

R303.1 Habitable rooms. All habitable rooms shall be provided with aggregate glazing area of not less than 8 percent of the floor area of such rooms. Natural ventilation shall be through windows, doors, louvers or other approved openings to the outdoor air. Such openings shall be provided with ready access or shall otherwise be readily controllable by the building occupants. The minimum openable area to the outdoors shall be 4 percent of the floor area being ventilated.

> **Exceptions:** 1. The glazed areas need not be openable where the opening is not required by Section R310 and an approved

Section R303.4.1 as follows - Light activation - "The control for activation of the required interior stairway lighting shall be accessible at the top and bottom of each stairway <u>having more than five risers</u> without traversing any step of the stair".

Section R304 - Minimum Room Areas

R304.1 Minimum area every dwelling unit shall have at least one habitable room that shall have not less than 120 square feet of gross floor area.

R304.2 Other rooms. Other habitable rooms shall have a floor area of not less than 70 square feet.

> **Exception:** Every kitchen shall have not less than 50 square feet of gross floor area.

R304.3 Minimum dimensions. Habitable rooms shall not be less than 7 feet in any horizontal dimension.

R304.4 Height effect on room area. Portions of a room with a sloping ceiling measuring less than 5 feet a furred ceiling measuring less than 7 feet from the finished floor to the finished ceiling shall not be considered as contributing to the minimum required habitable area for that room.

Section R305 – Ceiling Height

R305.1 Minimum height. Habitable rooms, hallways, corridors, bathrooms, toiletrooms, laundry rooms and basements shall have a ceiling height of not less than 7 feet. The required height shall be measured from the finish floor to the lowest projection from the ceiling.

Exceptions:

1. Beams and girders spaced not less than 4 feet on center may project not more than 6 inches below the required ceiling height.
2. Ceilings in basements without habitable spaces may project to within 6 feet, 8 inches of the finish floor; and beams, girders, ducts or other obstructions may project to within 6 feet, 4 inches of the finished floor.
3. Not more than 50 percent of the required floor area of a room or space is permitted to have a sloped ceiling less than 7 feet in height with no portion of the required floor area less than 5 feet in height.

Section R309 – Garages and Carports

R309.1 Floor surface. Garage floor surfaces shall be of approved noncombustible material. The area of floor used for parking of automobiles or other vehicles shall be sloped to facilitate the movement of liquids to a drain or toward the main vehicle entry doorway.

R309.2 Carports. Carports shall be open on at least two sides. Carport floor surfaces shall be of approved noncombustible material. A carport not open on at least two sides shall be considered a garage and shall comply with the provisions of this section for a garage.

Exception: Asphalt surfaces shall be permitted at ground level in carports. The area of floor used for parking of automobiles or other vehicles shall be sloped to facilitate the movement of liquids to a drain or toward the main vehicle entry.

Section R310 - Emergency Escape and Rescue Openings

R310.1 Emergency escape and rescue required. Basements with habitable space and every sleeping room shall have at least one openable emergency escape and rescue window or exterior door for emergency escape and rescue. Where openings are provided as a means of escape and rescue they shall have a sill height of not more than 44 inches above the floor (48 inches if below grade in a single family dwelling). Where a door opening having a threshold below the adjacent ground elevation serves as an emergency escape and rescue opening and is provided with a bulkhead enclosure, the bulkhead enclosure shall comply with Section R310.3. The net, clear opening dimensions required by this section shall be obtained by the normal operation of the window or door opening from the inside. Escape and rescue window openings with a finished sill height below the adjacent ground elevation shall be provided with a window well in accordance with Section R310.2.

R310.1.1 Minimum opening area. All emergency escape and rescue openings shall have a minimum net clear opening of 5.7 square feet.

Exception: Grade floor openings shall have a minimum net clear opening of 5 square feet.

R310.1.2 Minimum opening height. The minimum net clear opening height shall be 24 inches.

R310.1.3 Minimum opening width. The minimum net clear opening width shall be 20 inches.

R310.1.4 Operational constraints. Emergency escape and rescue openings shall be operational from the inside of the room without the use of keys or tools.

Section R310.2 - Window Well

R310.2 Window wells required for emergency escape and rescue shall have horizontal dimensions that allow the door or window of the emergency escape and rescue opening to be fully opened. The horizontal dimensions of the window well shall provide a minimum net clear area of 9 square feet with a minimum horizontal projection and width of 36 inches.

> **Exception:** The ladder or steps required by Section R310.2.1 shall be permitted to encroach a maximum of 6 inches into the required dimensions of the window well.

Local Amendment to SectionR310: *"Exception: Below grade emergency escape and rescue window may have a maximum sill height of 48 inches."*

R310.2.1 Ladder and steps. Window wells with a vertical depth greater than 44 inches below the adjacent ground level shall be equipped with a permanently affixed ladder or steps usable with the window in the fully open position. Ladders or steps required by this section shall not be required to comply with Sections R311.7 and R311.8. Ladders or rungs shall have an inside width of at least 12 inches shall project at least 3 inches from the wall and shall be spaced not more than 18 inches on center vertically for the full height of the window well.

Local Amendment to Section R310.2.1 *Install a minimum 30" X 16" permanently attached platform, in the window well, that will reduce the vertical depth of the window well to no more than 42" below the top of the window well and that will not impede the operation of the window."*

R310.3 Bulkhead enclosures. Bulkhead enclosures shall provide direct access to the basement. The bulkhead enclosure with the door panels in the fully open position shall provide the minimum net clear opening required by Section R310.1.1. Bulkhead enclosures shall also comply with Section R311.7.8.2.

R310.4 Bars, grills, covers and screens. Bars, grills, covers, screens or similar devices are permitted to be placed over emergency escape and rescue openings, bulkhead enclosures, or window wells that serve such openings, provided the minimum net clear opening size complies with Sections R310.1.1 to R310.1.3, and such devices shall be releasable or removable from the inside without the use of a key, tool or force greater than that which is required for normal operation of the escape and rescue opening.

Section R311 – Means of Egress

R311.1 Egress Door. At least one egress door shall be provided for each *dwelling* unit. The egress door shall be side-hinged, and shall provide a minimum clear width of 32 inches (813mm) when measured between the face of the door and the stop, with the door open 90 degrees (1.57 rad). The

minimum clear height of the door opening shall not be less than 78 inches (1981 mm) in height measured from the top of the threshold to the bottom of the stop. Other doors shall not be required to comply with these minimum dimensions. Egress doors shall be readily openable from inside the *dwelling* without the use of a key or special knowledge or effort.

R311.3 Floors and landings at exterior doors. There shall be a landing or floor on each side of each exterior door. The width of each landing shall not be less than the door served. Every landing shall have a minimum dimension of 36 inches (914 mm) measured in the direction of travel. Exterior landings shall be permitted to have a slope not to exceed 1/4 unit vertical in 12 units horizontal (2-percent).

R311.4 Hallways. The minimum width of a hallway shall be not less than 3 feet.

R311.5.1 Attachment. Exterior landings, decks, balconies, stairs and similar facilities shall be positively anchored to the primary structure to resist both vertical and lateral forces or shall be designed to be self-supporting. Attachment shall not be accomplished by use of toenails or nails subject to withdrawal.

R311.6 Hallways. The minimum width of a hallway shall be not less than 3 feet (914 mm).

Section R311.7 - Stairways

R311.7.2 Headroom. The minimum headroom in all parts of the stairway shall not be less than 6 feet 8 inches (2032 mm) measured vertically from the sloped line adjoining the tread nosing or from the floor surface of the landing or platform on that portion of the stairway.

> **Exception:** Where the nosings of treads at the side of a flight extend under the edge of a floor opening through which the stair passes, the floor opening shall be allowed to project horizontally into the required headroom a maximum of 4¾ inches (121 mm).

R311.7.4.1Riser height. The maximum riser height shall be ~~7¾ inches (196 mm)~~(see below). The riser shall be measured vertically between leading edges of the adjacent treads. The greatest riser height within any flight of stairs shall not exceed the smallest by more than 3/8 inch (9.5 mm).

Local Amendment to Section R311.7.4.1*: The maximum riser height shall be* ***8 inches****.*

R311.7.4.2 Tread depth. The minimum tread depth shall be ~~10 inches (254 mm)~~(see below). The tread depth shall be measured horizontally between the vertical planes of the foremost projection of adjacent treads and at a right angle to the tread's leading edge. The greatest tread depth within any flight of stairs shall not exceed the smallest by more than 3/8 inch (9.5 mm).

Local Amendment to Section R311.7.4.2*: The minimum tread depth shall be 9 inches.*

> ***Exception:*** *Where a landing is not provided or required by section 311.3.2 or 311.7.5. the top tread of a stair serving exterior doors other than the required exit door, and in-swinging doors opening into an attached garage, shall be permitted to exceed the smallest tread by more than 3/8 inch (9.5mm). Such a tread shall be at least 18 inches (457mm) measured in the direction of travel.*

R311.7.7 Handrails Handrails shall be provided on at least one side of each continuous run of treads or flight with four or more risers.

R311.7.7.1 Height. Handrail height, measured vertically from the sloped plane adjoining the tread nosing, or finish surface of ramp slope, shall be not less than 34 inches (864 mm)and not more than 38 inches (965 mm).

Exceptions:

1. The use of a volute, turnout or starting easing shall be allowed over the lowest tread.
2. When handrail fittings or bendings are used to provide continuous transition between flights, the transition from handrail to guardrail, or used at the start of a flight, the handrail height at the fittings or bendings shall be permitted to exceed the maximum height.

R311.7.7.2 Continuity. Handrails for stairways shall be continuous for the full length of the flight, from a point directly above the top riser of the flight to a point directly above the lowest riser of the flight. Handrail ends shall be returned or shall terminate in newel posts or safety terminals. Handrails adjacent to a wall shall have a space of not less than 11/2 inch (38 mm) between the wall and the handrails.

Exceptions:

1. Handrails shall be permitted to be interrupted by a newel post at the turn.
2. The use of a volute, turnout, starting easing or starting newel shall be allowed over the lowest tread.

R311.7.7.3 Grip-size. All required handrails shall be of one of the following types or provide equivalent graspability.

1. Type I. Handrails with a circular cross section shall have an outside diameter of at least 11/4 inches (32 mm) and not greater than 2 inches (51 mm). If the handrail is not circular, it shall have a perimeter dimension of at least 4 inches (102 mm) and not greater than 61/4 inches (160 mm) with a maximum cross section of dimension of 2 1/4 inches (57 mm). Edges shall have a minimum radius of 0.01 inch (0.25 mm).
2. Type II. Handrails with a perimeter greater than 61/4 inches (160 mm) shall have a graspable finger recess area on both sides of the profile. The finger recess shall begin within a distance of 3/4 inch (19 mm) measured vertically from the tallest portion of the profile and achieve a depth of at least 5/16 inch (8 mm) within 7/8 inch (22 mm) below the widest portion of the profile. This required depth shall continue for at least 3/8 inch (10 mm) to a level that is not less than 13/4 inches (45 mm) below the tallest portion of the profile. The minimum width of the handrail above the recess shall be 11/4 inches (32 mm) to a maximum of 23/4 inches (70 mm). Edges shall have a minimum radius of 0.01 inch (0.25 mm).

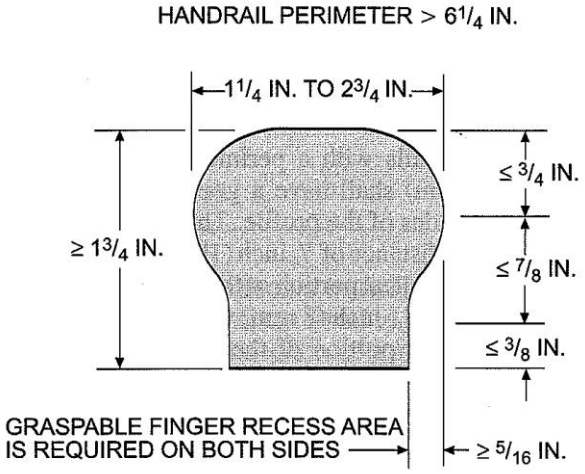

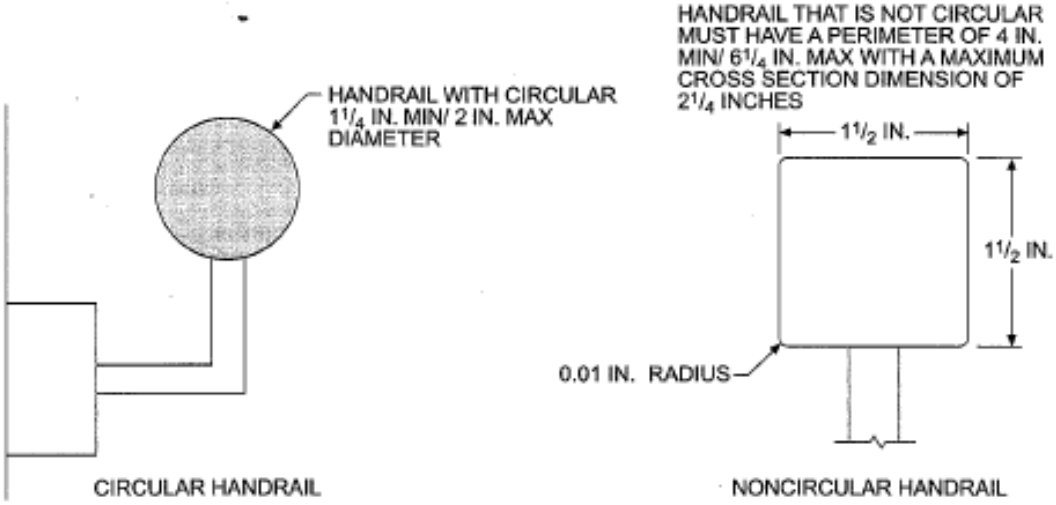

SECTION R313 - GUARDS

R312.1 Where required. *Guards* shall be located along open-sided walking surfaces, including stairs, ramps and landings, that are located more than 30 inches (762 mm) measured vertically to the floor or *grade* below at any point within 36 inches (914 mm) horizontally to the edge of the open side. Insect screening shall not be considered as a *guard*.

R312.3 Guard opening limitations. Required *guards* shall not have openings from the walking surface to the required *guard* height which allow passage of a sphere 4 inches (102 mm)in diameter.

Exceptions:

1. The triangular openings at the open side of a stair, formed by the riser, tread and bottom rail of a *guard*, shall not allow passage of a sphere 6 inches (153 mm) in diameter.
2. *Guards* on the open sides of stairs shall not have openings which allow passage of a sphere 4 3/8 inches (111 mm) in diameter.

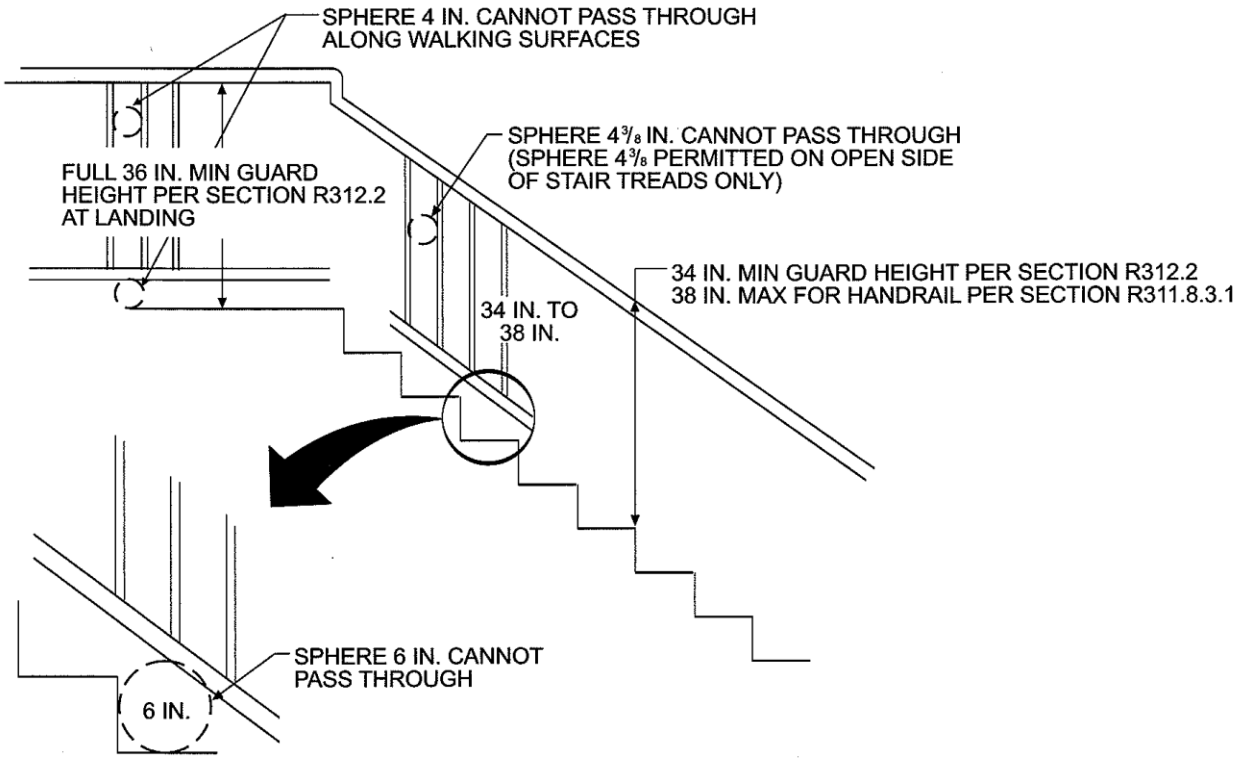

Section R314 – Smoke Alarms

R314.3 Location. Smoke alarms shall be installed in the following locations:

1. In each sleeping room.
2. Outside each separate sleeping area in the immediate vicinity of the bedrooms.
3. On each additional *story* of the *dwelling*, including *basements* and habitable attics but not including crawl spaces and uninhabitable *attics*. In *dwellings* or *dwelling units* with split levels and without an intervening door between the adjacent levels, a smoke alarm installed on the upper level shall suffice for the adjacent lower level provided that the lower level is less than one full *story* below the upper level. When more than one smoke alarm is required to be installed within an individual *dwelling* unit the alarm devices shall be interconnected in such a manner that the actuation of one alarm will activate all of the alarms in the individual unit.

Local Amendment *to* ***Section R314.1*** *Single and multiple-station smoke alarms.*
Add to item #3. "In dwelling units where the ceiling height of a room open to the hallway serving the bedrooms exceeds that of the hallway by 24 inches (610 mm) or more, smoke detectors shall be installed in the hallway and in the adjacent room".

R314.3.1 Alterations, repairs and additions. When *alterations,* repairs or *additions* requiring a *permit* occur, or when one or more sleeping rooms are added or created in existing *dwellings*, the individual *dwelling unit* shall be equipped with smoke alarms located as required for new *dwellings*.

Exceptions:

1. Work involving the exterior surfaces of *dwellings*, such as the replacement of roofing or siding, or the *addition* or replacement of windows or doors, or the *addition* of a porch or deck, are exempt from the requirements of this section.
2. Installation, *alteration* or repairs of plumbing or mechanical systems are exempt from the requirements of this section.

R314.4 Power source. Smoke alarms shall receive their primary power from the building wiring when such wiring is served from a commercial source, and when primary power is interrupted, shall receive power from a battery. Wiring shall be permanent and without a disconnecting switch other than those required for overcurrent protection. Smoke alarms shall be interconnected.

Exceptions:

1. Smoke alarms shall be permitted to be battery operated when installed in buildings without commercial power.
2. Hard-wiring of smoke alarms in existing areas shall not be required where the *alterations* or repairs do not result in the removal of interior wall or ceiling finishes exposing the structure, unless there is an *attic*, crawl space or *basement* available which could provide access for hard wiring and interconnection without the removal of interior finishes.

Section R315 – Carbon Monoxide Detectors

R315.1 Carbon monoxide alarms. For new construction, an approved carbon monoxide alarm shall be installed outside of each separate sleeping area in the immediate vicinity of the bedrooms in *dwelling units* within which fuel-fired *appliances* are installed and in dwelling units that have attached garages.

R315.2 Where required in existing dwellings. Where work requiring a *permit* occurs in existing *dwellings* that have attached garages or in existing dwellings within which fuel-fired *appliances* exist, carbon monoxide alarms shall be provided in accordance with Section R315.1.

Local Amendment: **Table R404.1 (2)**

FOUNDATION WALL REINFORCING

Active Pressure = 45 pcf

Minimum Reinforcement for Concrete Foundation Walls		
Wall Height (h) feet	Wall Thickness (t) Inches	Vertical Reinforcing
8	8	#4 @ 24" o.c. #5 @ 40" o.c.
	10	#4 @ 30" o.c. #5 @ 50" o.c.
9	8	#4 @ 18" o.c. #5 @ 28" o.c.
	10	#4 @ 24" o.c. #5 @ 36" o.c.
10	10	#4 @ 16" o.c. #5 @ 26" o.c.

Notes:

1. Chart is based on an active soil pressure of 45 pounds per cubic foot (pcf).
2. Reinforcing steel shall be ASTM A61 5 Fy = 60,000 pounds per square inch (psi).
3. The vertical reinforcing bars are to be located on the inside face.
4. Minimum concrete strength Fc' = 3000 pounds per square inch (psi).
5. Backfill shall not be placed until first floor framing and sheathing is installed and fastened or adequately braced and the concrete floor slab is in place or the wall is adequately braced.

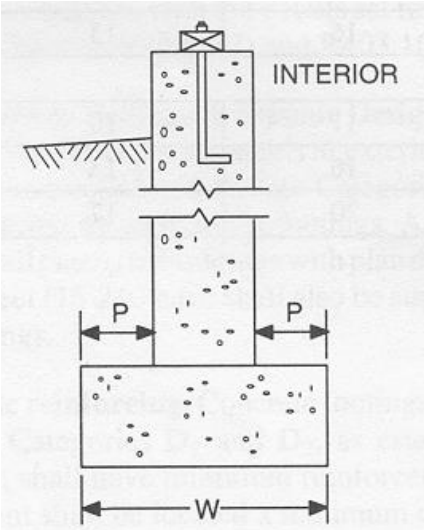

BASEMENT OR CRAWL SPACE WITH CONCRETE WALL AND SPREAD FOOTING

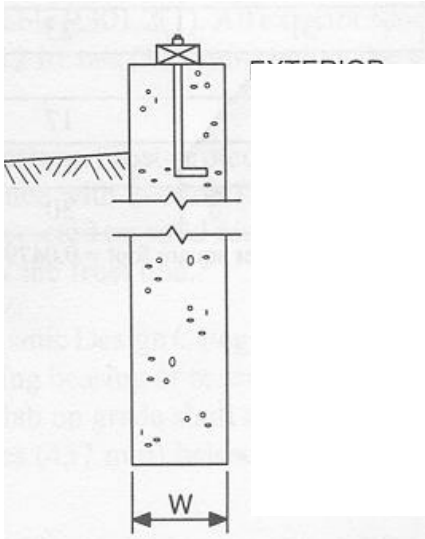

BASEMENT OR CRAWL SPACE WITH FOUNDATION WALL BEARING DIRECTLY ON SOIL

Section R602 - Wood Wall Framing

R602.1 Identification. Load-bearing dimension lumber for studs, plates and headers shall be identified by a grade mark of a lumber grading or inspection agency that has been *approved* by an accreditation body that complies with DOCPS 20. In lieu of a grade mark, a certification of inspection issued by a lumber grading or inspection agency meeting the requirements of this section shall be accepted.

R602.1.1 End-jointed lumber. *Approved* end-jointed lumber identified by a grade mark conforming to Section R602.1 may be used interchangeably with solid-sawn members of the same species and grade.

R602.1.2 Structural glued laminated timbers. Glued laminated timbers shall be manufactured and identified as required in ANSI/AITC A190.1 and ASTM D 3737.

R602.2 Grade. Studs shall be a minimum No. 3, standard or stud grade lumber.

Exception: Bearing studs not supporting floors and nonbearing studs may be utility grade lumber, provided the studs are spaced in accordance with Table R602.3(5).

R602.3 Design and construction. Exterior walls of wood-frame construction shall be designed and constructed in accordance with the provisions of this chapter and Figures R602.3(1) and R602.3.(2) or in accordance with AF&PA's NDS. Components of exterior walls shall be fastened in accordance with Tables R602.3(1) through R602.3(4). Structural wall sheathing shall be fastened directly to structural framing members.

R602.3.1 Stud size, height and spacing. The size, height and spacing of studs shall be in accordance with Table R602.3(5).

R602.3.2 Top plate. Wood stud walls shall be capped with a double top plate installed to provide overlapping at corners and intersections with bearing partitions. End joints in top plates shall be offset at least 24 inches (610 mm). Joints in plates need not occur over studs. Plates shall be not less than 2-inches (51 mm) nominal thickness and have a width at least equal to the width of the studs.

Exception: A single top plate may be installed in stud walls, provided the plate is adequately tied at joints, corners and intersecting walls by a minimum 3-inch-by-6-inch by a 0.036-inch-thick (76 mm by 152 mm by 0.914 mm) galvanized steel plate that is nailed to each wall or segment of wall by six 8d nails on each side, provided the rafters or joists are centered over the studs with a tolerance of no more than 1 inch (25 mm). The top plate may be omitted over lintels that are adequately tied to adjacent wall sections with steel plates or equivalent as previously described.

R602.3.3 Bearing studs. Where joists, trusses or rafters are spaced more than 16 inches (406 mm) on center and the bearing studs below are spaced 24 inches (610 mm) on center, such members shall bear within 5 inches (127 mm) of the studs beneath.

Exceptions:

1. The top plates are two 2-inch by 6-inch (38 mm by 140mm)or two 3-inch by 4-inch (64mmby 89mm) members.
2. A third top plate is installed.
3. Solid blocking equal in size to the studs is installed to reinforce the double top plate.

R602.3.4 Bottom (sole) plate. Studs shall have full bearing on a nominal 2-by (51 mm) or larger plate or sill having a width at least equal to the width of the studs.

R602.4 Interior load-bearing walls. Interior load-bearing walls shall be constructed, framed and fireblocked as specified for exterior walls.

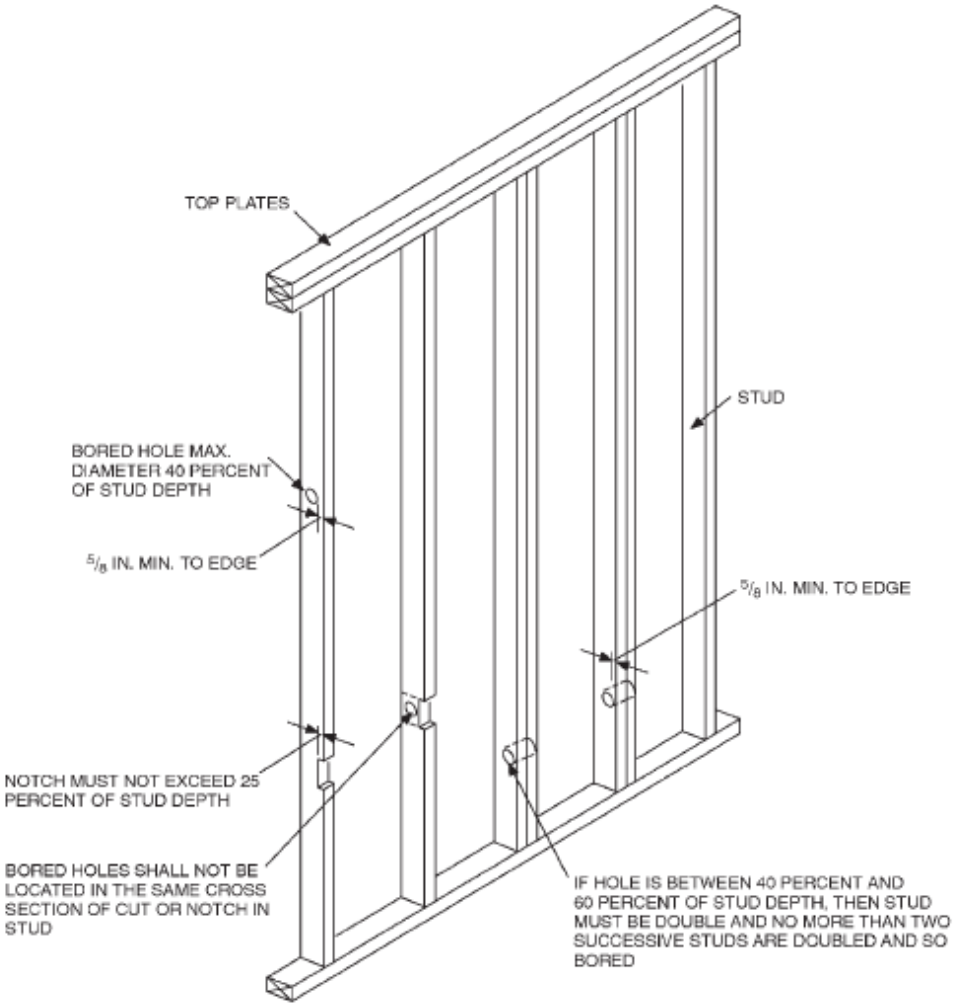

R602.5 Interior nonbearing walls. Interior nonbearing walls shall be permitted to be constructed with 2-inch-by-3-inch (51 mm by 76 mm) studs spaced 24 inches (610 mm) on center or, when not part of a *braced wall line*, 2-inch-by-4-inch (51 mm by 102 mm) flat studs spaced at 16 inches (406 mm) on center. Interior nonbearing walls shall be capped with at least a single top plate. Interior nonbearing walls shall be fireblocked in accordance with Section R602.8.

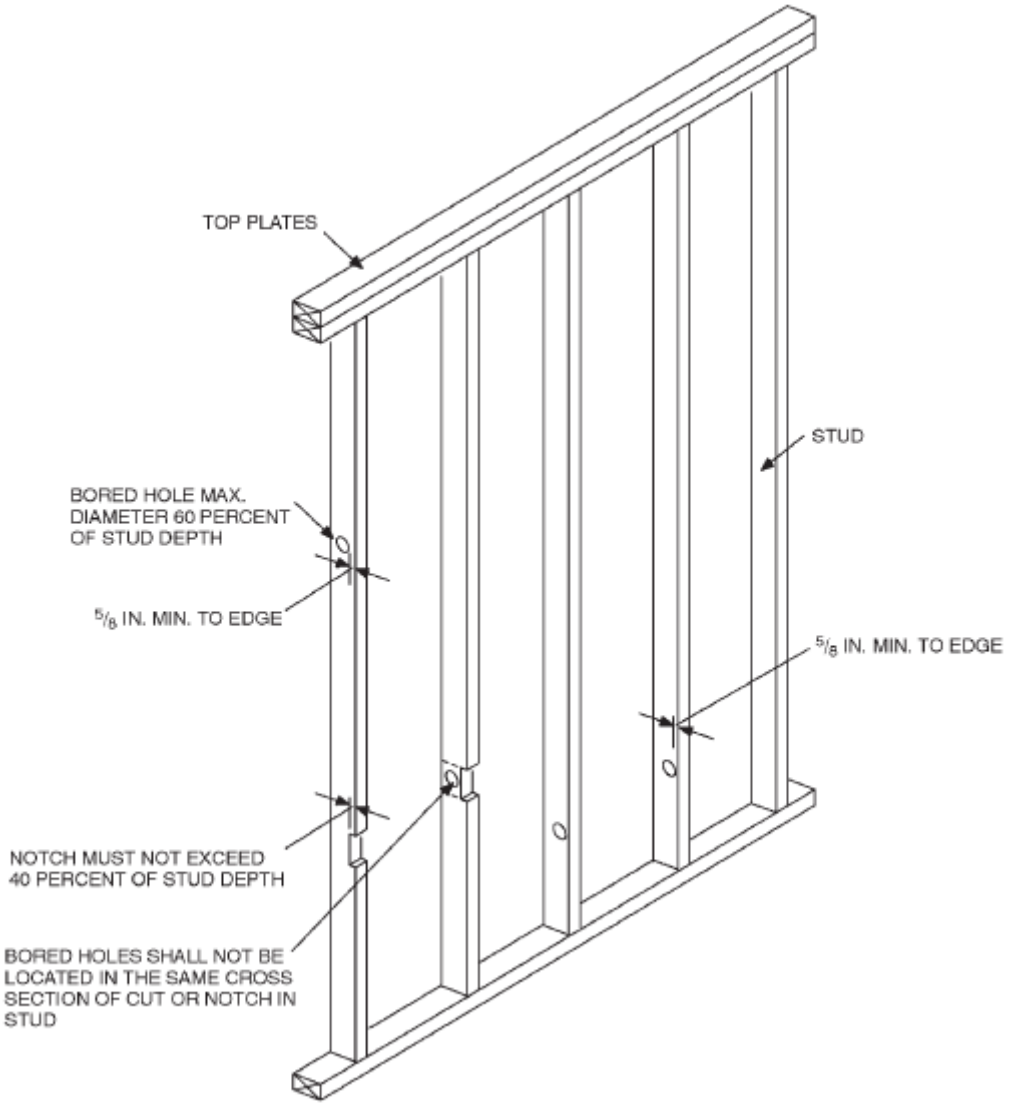

R602.6 Drilling and notching–studs. Drilling and notching of studs shall be in accordance with the following:

1. Notching. Any stud in an exterior wall or bearing partition may be cut or notched to a depth not exceeding 25 percent of its width. Studs in nonbearing partitions may be notched to a depth not to exceed 40 percent of a single stud width.
2. Drilling. Any stud may be bored or drilled, provided that the diameter of the resulting hole is no more than 60 percent of the stud width, the edge of the hole is no more than 5/8 inch (16 mm) to the edge of the stud, and the hole is not located in the same section as a cut or notch. Studs located in exterior walls or bearing partitions drilled over 40 percent and up to 60 percent shall also be doubled with no more than two successive doubled studs bored. See Figures R602.6(1) and R602.6(2).

Exception: Use of *approved* stud shoes is permitted when they are installed in accordance with the manufacturer's recommendations.

R602.6.1 Drilling and notching of top plate. When piping or ductwork is placed in or partly in an exterior wall or interior load-bearing wall, necessitating cutting, drilling or notching of the top plate by more than 50 percent of its width, a galvanized metal tie not less than 0.054 inch thick (1.37 mm) (16 ga) and 11/2 inches (38 mm) wide shall be fastened across and to the plate at each side of the opening with not less than eight 10d (0.148 inch diameter) having a minimum length of 11/2 inches (38 mm) at each side or equivalent. The metal tie must extend a minimum of 6 inches past the opening. See Figure R602.6.1.
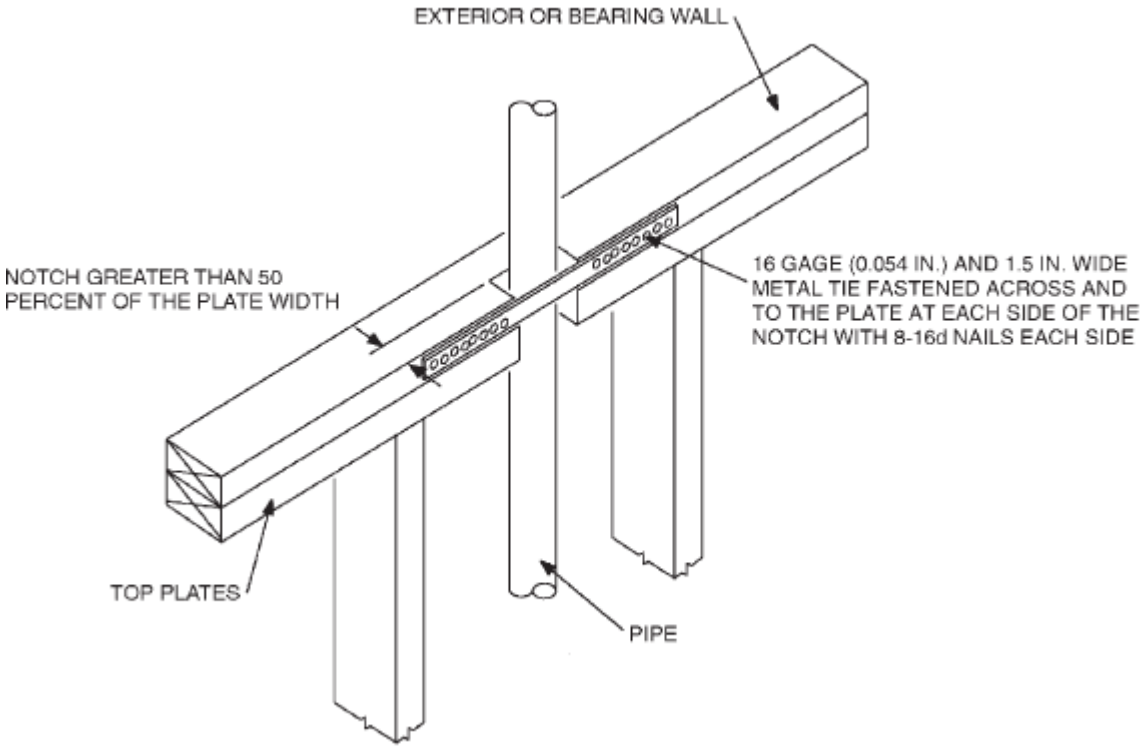
Exception: When the entire side of the wall with the notch or cut is covered by wood structural panel sheathing.