FARGO CITY COMMISSION NORTH BROADWAY BRIDGE UPDATE

02.22.2021

THE CITY OF Fargo FAR MORE

UPDATE ON NORTH BROADWAY BRIDGE - LOCATION

THE CITY OF Fargo FAR MORE

UPDATE ON NORTH BROADWAY BRIDGE - LOCATION

THE CITY OF Fargo FAR MORE

UPDATE ON NORTH BROADWAY BRIDGE - LOCATION

THE CITY OF Fargo FAR MORE

UPDATE ON NORTH BROADWAY BRIDGE - HISTORY

THIS BRIDGE WAS CONSTRUCTED IN 1990

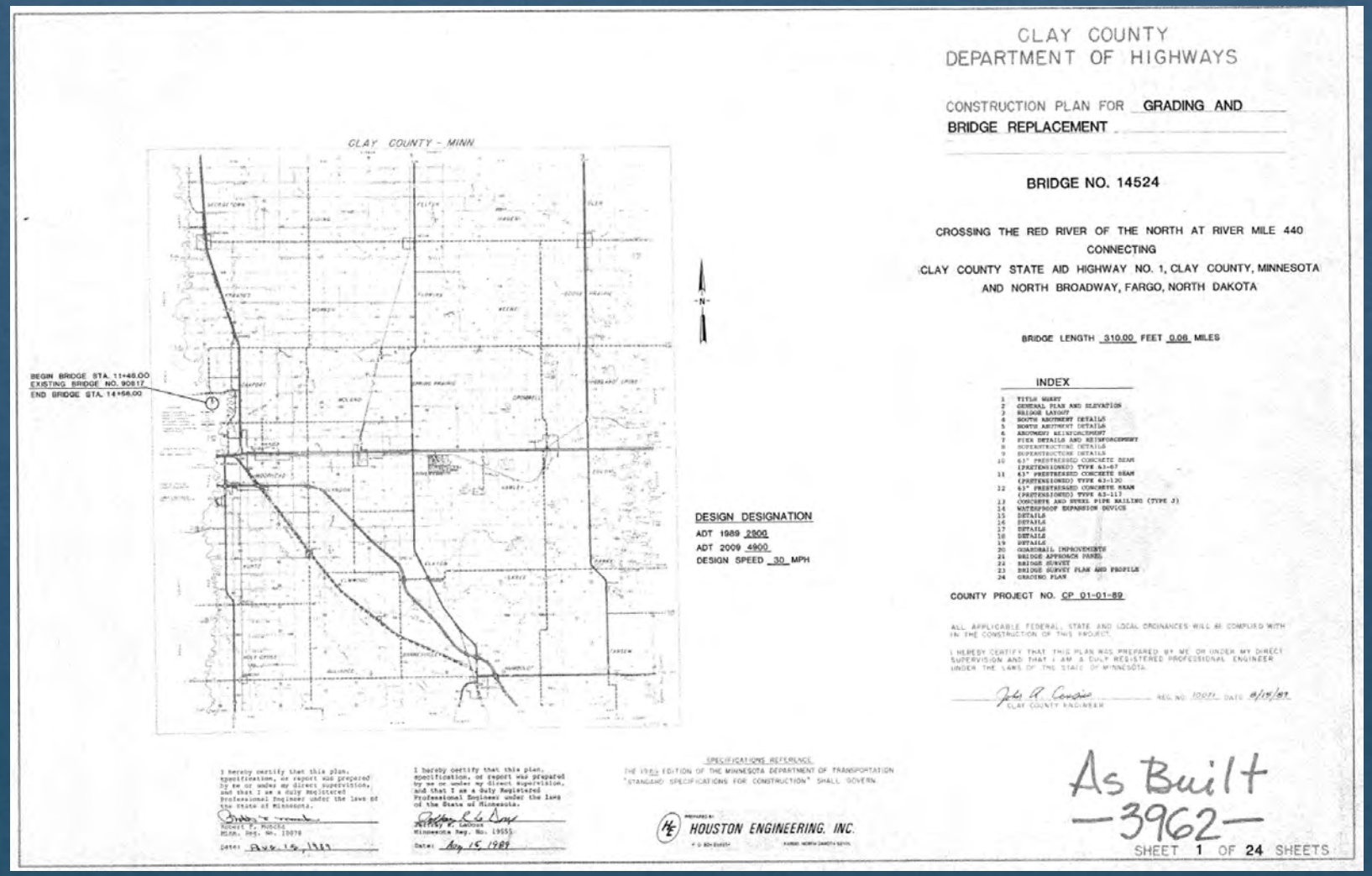

CLAY COUNTY
DEPARTMENT OF HIGHWAYS

CONSTRUCTION PLAN FOR GRADING AND BRIDGE REPLACEMENT

BRIDGE NO. 14524

CROSSING THE RED RIVER OF THE NORTH AT RIVER MILE 440
CONNECTING
CLAY COUNTY STATE AID HIGHWAY NO. 1, CLAY COUNTY, MINNESOTA
AND NORTH BROADWAY, FARGO, NORTH DAKOTA

BRIDGE LENGTH 310.00 FEET 0.06 MILES

INDEX

1 TITLE SHEET
2 GENERAL PLAN AND ELEVATION
3 BRIDGE LAYOUT
4 SOUTH ABUTMENT DETAILS
5 NORTH ABUTMENT DETAILS
6 ABUTMENT REINFORCEMENT
7 PIER DETAILS AND REINFORCEMENT
8 SUPERSTRUCTURE DETAILS
9 SUPERSTRUCTURE DETAILS
10 63" PRESTRESSED CONCRETE BEAM (PRETENSIONED) TYPE 63-87
11 63" PRESTRESSED CONCRETE BEAM (PRETENSIONED) TYPE 63-130
12 63" PRESTRESSED CONCRETE BEAM (PRETENSIONED) TYPE 63-117
13 CONCRETE AND STEEL PIPE RAILING (TYPE 3)
14 WATERPROOF EXPANSION DEVICE
15 DETAILS
16 DETAILS
17 DETAILS
18 DETAILS
19 DETAILS
20 GUARDRAIL IMPROVEMENTS
21 BRIDGE APPROACH PANEL
22 BRIDGE SURVEY
23 BRIDGE SURVEY PLAN AND PROFILE
24 GRADING PLAN

COUNTY PROJECT NO. CP 01-01-89

ALL APPLICABLE FEDERAL, STATE AND LOCAL ORDINANCES WILL BE COMPLIED WITH IN THE CONSTRUCTION OF THIS PROJECT.

I HEREBY CERTIFY THAT THIS PLAN WAS PREPARED BY ME OR UNDER MY DIRECT SUPERVISION AND THAT I AM A DULY REGISTERED PROFESSIONAL ENGINEER UNDER THE LAWS OF THE STATE OF MINNESOTA.

CLAY COUNTY ENGINEER REG. NO. 10071 DATE 8/19/89

CLAY COUNTY - MINN

BEGIN BRIDGE STA. 11+48.00
EXISTING BRIDGE NO. 90817
END BRIDGE STA. 14+58.00

DESIGN DESIGNATION
ADT 1989 2900
ADT 2009 4900
DESIGN SPEED 30 MPH

I hereby certify that this plan, specification, or report was prepared by me or under my direct supervision, and that I am a duly Registered Professional Engineer under the laws of the State of Minnesota.
Robert F. Hubbell
Minn. Reg. No. 10078
Date: Aug. 15, 1989

I hereby certify that this plan, specification, or report was prepared by me or under my direct supervision, and that I am a duly Registered Professional Engineer under the laws of the State of Minnesota.
Jeffrey R. LaDouceur
Minnesota Reg. No. 19555
Date: Aug 15 1989

SPECIFICATIONS REFERENCE
THE 1988 EDITION OF THE MINNESOTA DEPARTMENT OF TRANSPORTATION "STANDARD SPECIFICATIONS FOR CONSTRUCTION" SHALL GOVERN.

PREPARED BY HOUSTON ENGINEERING, INC.

As Built
—3962—

SHEET 1 OF 24 SHEETS

THE CITY OF Fargo FAR MORE

UPDATE ON NORTH BROADWAY BRIDGE - HISTORY

TYPICAL THREE SPAN BRIDGE

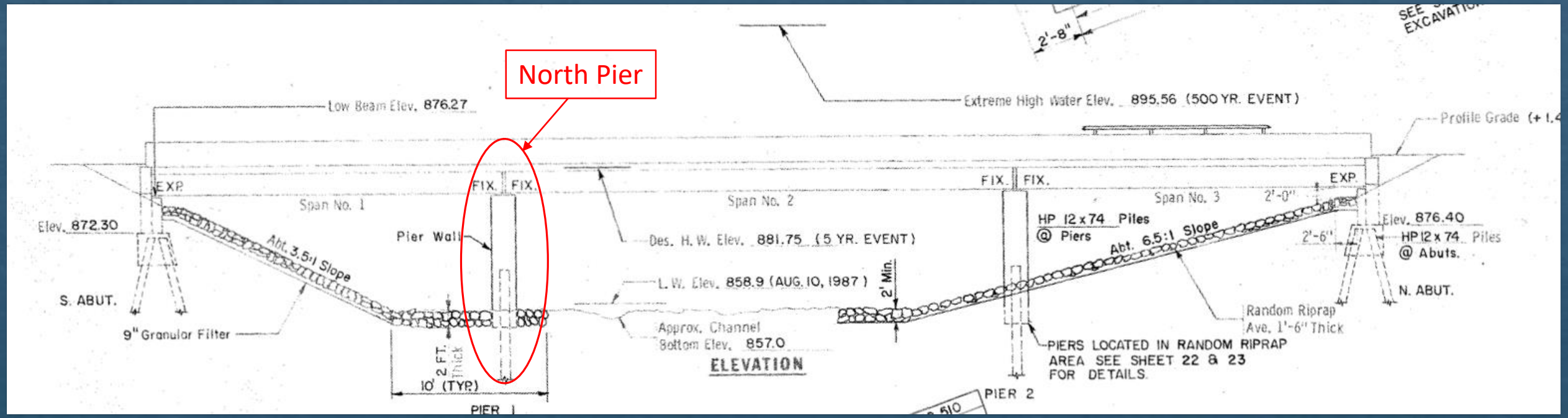

THE CITY OF Fargo FAR MORE

UPDATE ON NORTH BROADWAY BRIDGE - HISTORY

IN THE MID-90'S, ANNUAL INSPECTIONS FOUND THE NORTH PIER TILTING SOUTH (TOWARDS THE RIVER)

Figure 2. North Pier Response to Ground Movement (Prior to Expansion Joint Closure)

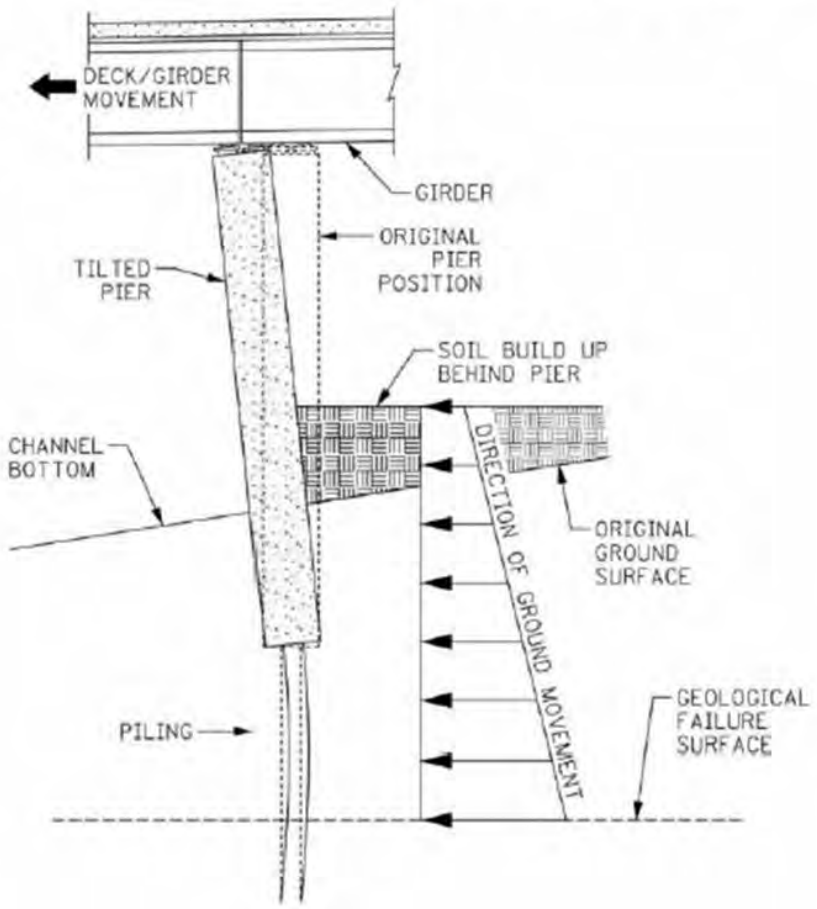

THE CITY OF Fargo FAR MORE

UPDATE ON NORTH BROADWAY BRIDGE - HISTORY

IN 2000, CLAY COUNTY AND THE CITY OF FARGO COMPLETED A PROJECT MEANT TO "CORRECT" THE TILTING PIER

- ADDED TO THE PIER TO HELP PROVIDE ADDITIONAL SUPPORT FOR THE GIRDER DUE TO THE MOVEMENT
- ADDED STEEL RODS TO HOLD THE TOP OF THE PIER FROM TILTING MORE
- UNFORTUNATELY, THE BOTTOM OF THE PIER CONTINUED TO MOVE SOUTH AFTER THE PROJECT

Figure 3. North Pier Response to Ground Movement (After Installation of Tie Rods in 2000)

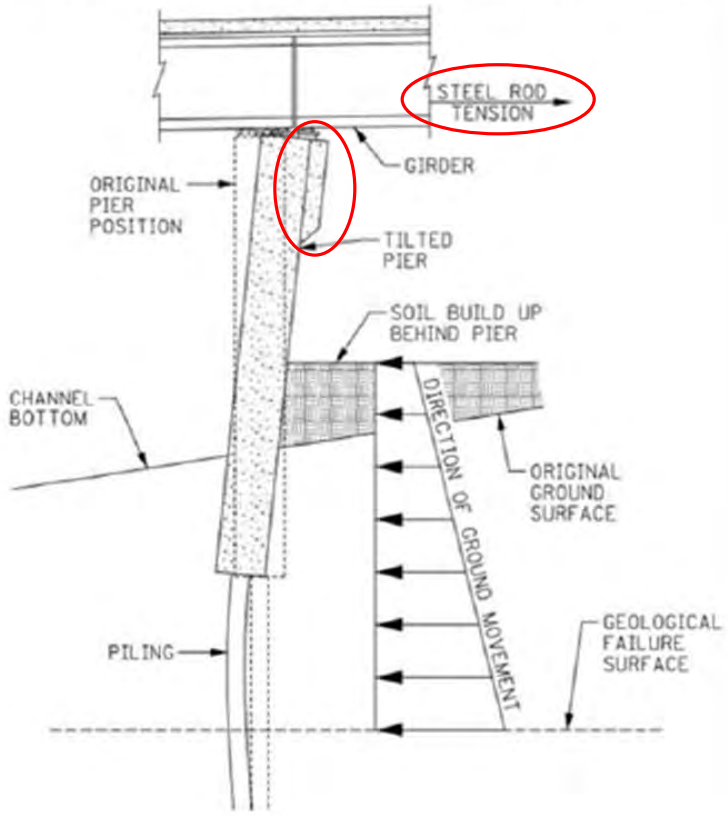

THE CITY OF Fargo FAR MORE

UPDATE ON NORTH BROADWAY BRIDGE - HISTORY

A BRIDGE/GEOTECHNICAL STUDY WAS COMPLETED IN 2020

- STUDY OUTCOMES:
  - RECOMMENDATION TO MONITOR BRIDGE PIER AND CLOSE THE BRIDGE IF THE PIER TILTING WORSENED

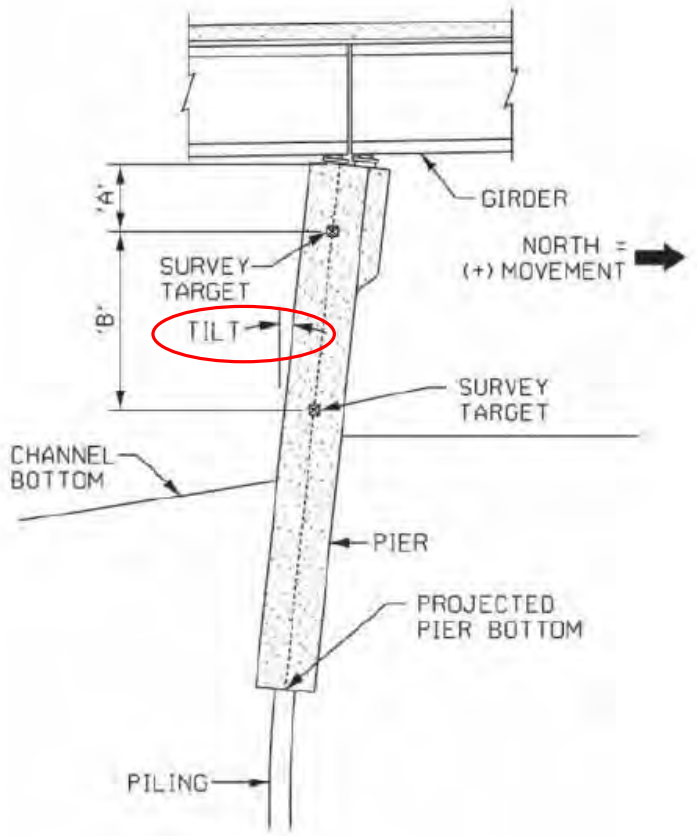

East Edge Tilt Angle ϕ (deg.)	West Edge Tilt Angle ϕ (deg.)	Maximum Monitoring Interval	Bridge Status
$\phi < 2.05°$	$\phi < 3.25°$	Monthly	Open
$2.05° \leq \phi < 2.30°$	$3.25° \leq \phi < 3.50°$	Weekly	Open
$2.30° \leq \phi$	$3.50° \leq \phi$	Weekly	CLOSE BRIDGE

UPDATE ON NORTH BROADWAY BRIDGE - CLOSURE

RECOMMENDED CLOSURE BY BRIDGE ENGINEER ON FEBRUARY 10, 2021 DUE TO WORSENING TILT

THE CITY OF Fargo FAR MORE

UPDATE ON NORTH BROADWAY BRIDGE – BRIDGE REHAB

- **INSTALL COFFERDAM AND NEW PILING**

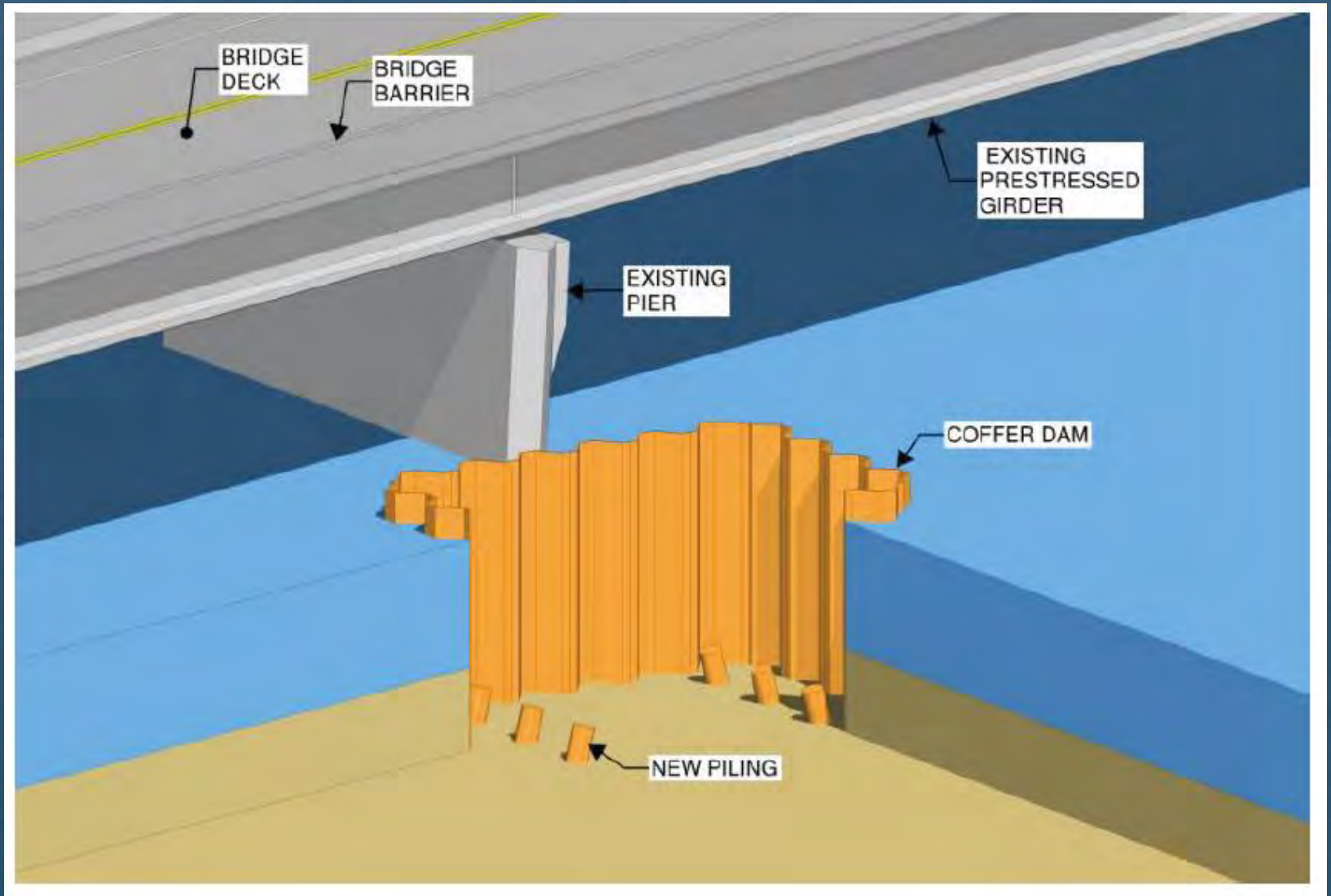

THE CITY OF Fargo FAR MORE

UPDATE ON NORTH BROADWAY BRIDGE – BRIDGE REHAB

- **INSTALL NEW PIER FOOTING AND COLUMN**

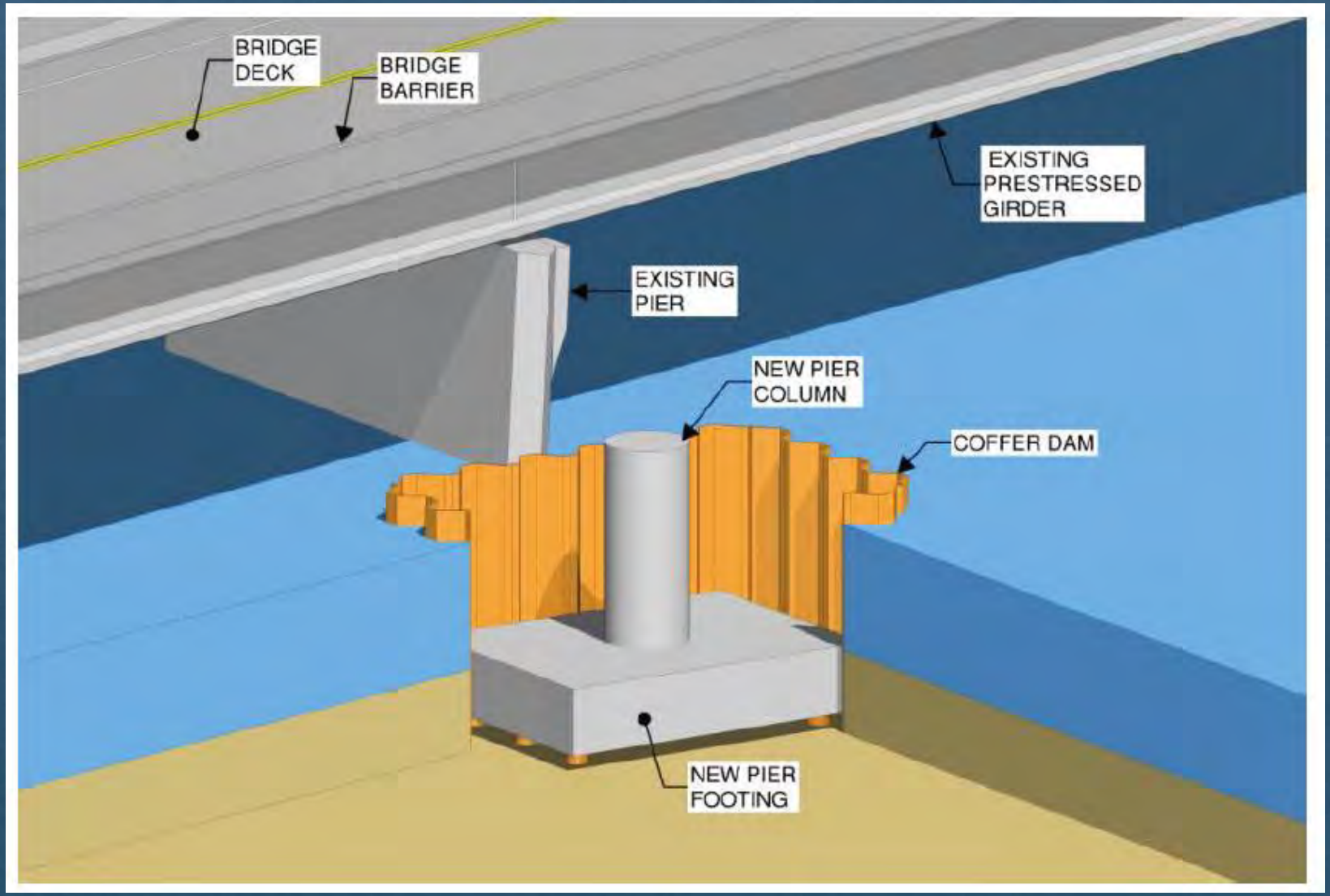

THE CITY OF Fargo FAR MORE

UPDATE ON NORTH BROADWAY BRIDGE – BRIDGE REHAB

- TEMPORARILY SUPPORT BRIDGE, REMOVE EXISTING PIER, AND INSTALL NEW PIER CAP

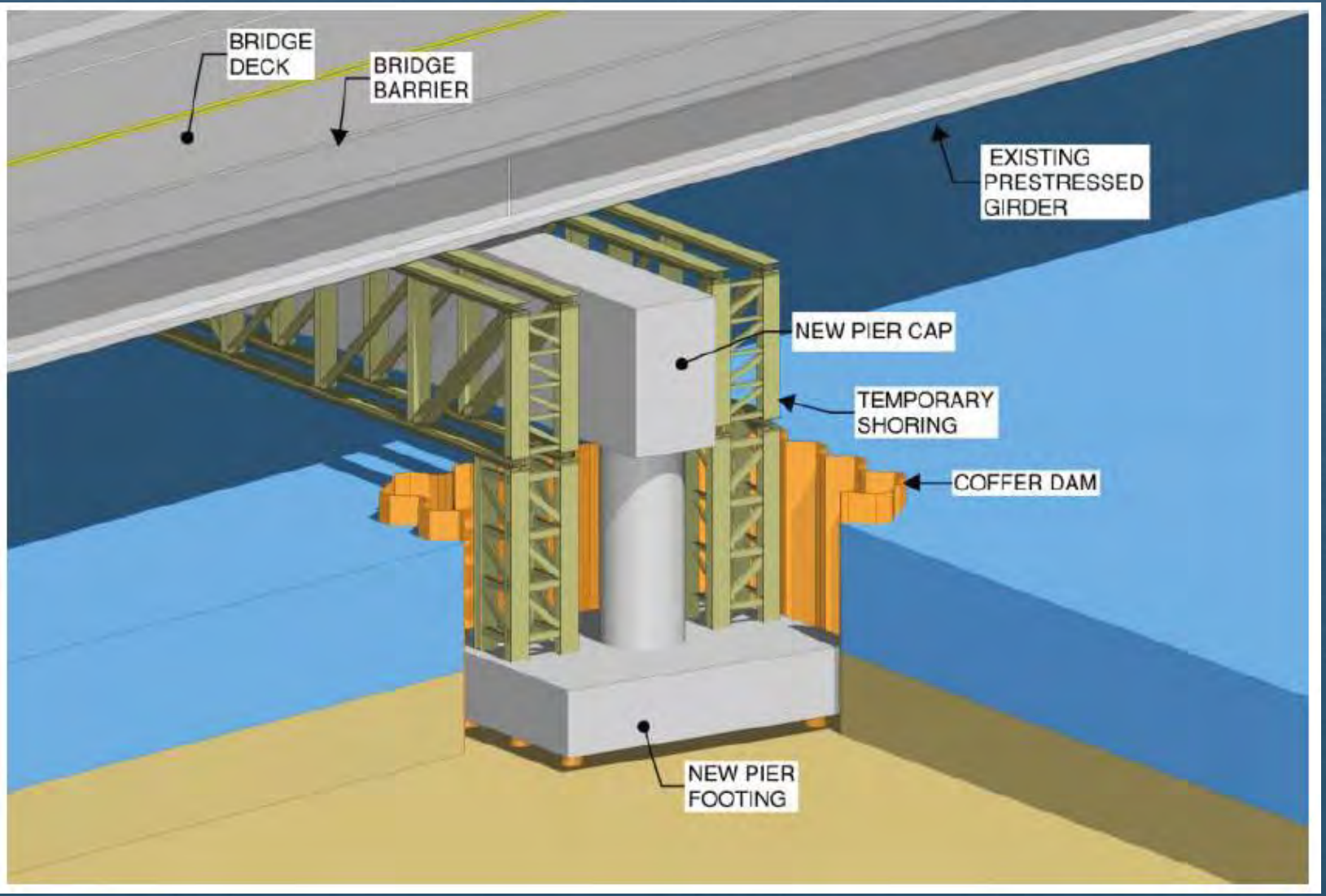

THE CITY OF Fargo FAR MORE

UPDATE ON NORTH BROADWAY BRIDGE – BRIDGE REHAB

- REMOVE TEMPORARY SUPPORTS, REMOVE COFFERDAM, AND REOPEN BRIDGE

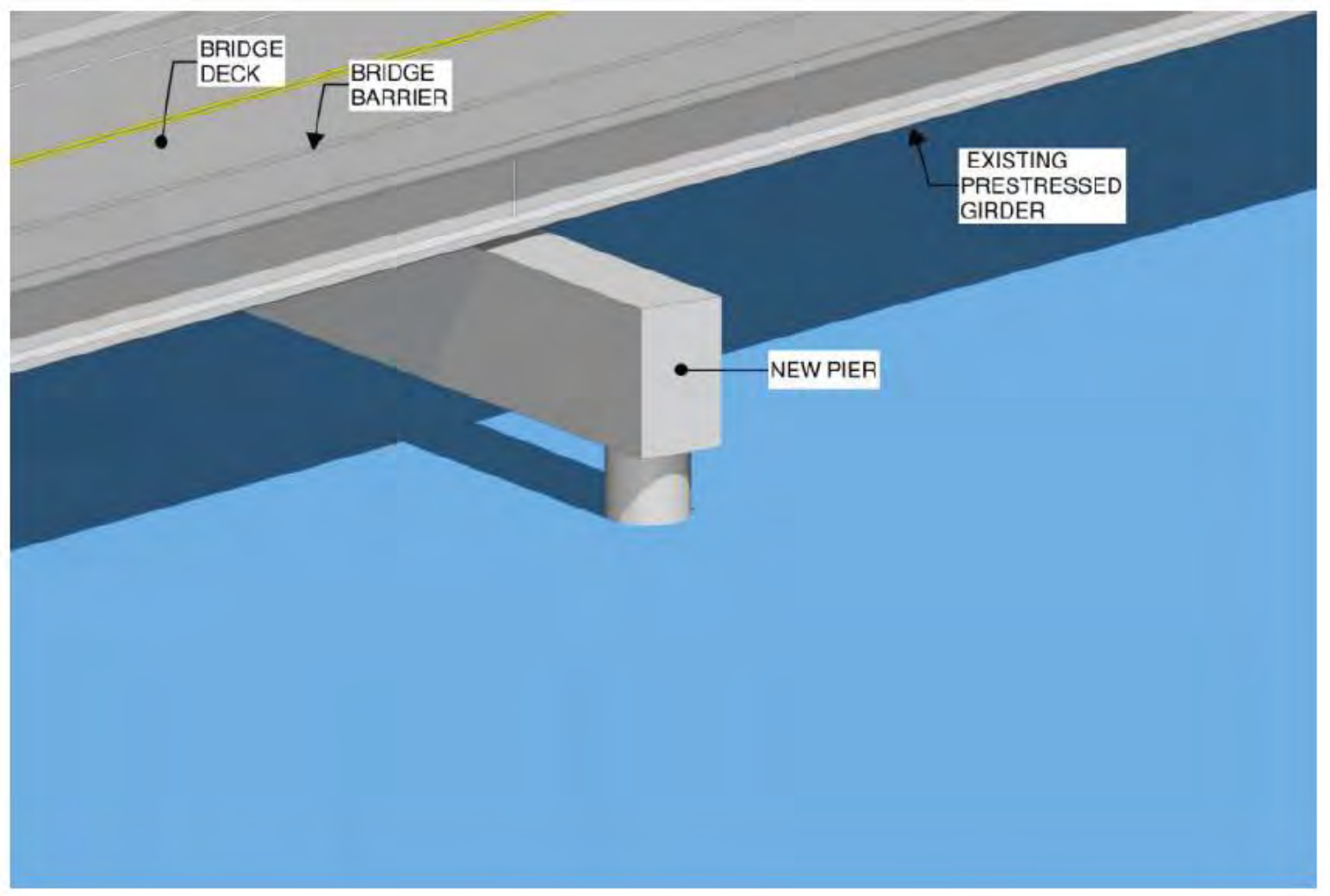

THE CITY OF Fargo FAR MORE

UPDATE ON NORTH BROADWAY BRIDGE – NEXT STEPS

- WORK WITH CLAY COUNTY STAFF TO FURTHER EVALUATE OPTIONS AND COSTS
  - POTENTIAL OPTIONS TO EVALUATE MAY INCLUDE:
    - REHAB (~$2 MILLION)
    - REPLACE AT SAME ELEVATION/LOCATION (~$4 MILLION)
    - REPLACE AT ELEVATION THAT WOULDN’T BE IMPACTED AT 100 YEAR FLOOD LEVELS ($ TBD)
    - REMOVE BRIDGE ($ TBD)

UPDATE ON NORTH BROADWAY BRIDGE – NEXT STEPS

- OTHER ITEMS THAT NEED TO BE EXPLORED AND CONSIDERED:
  - WORK WITH ENGINEERING FIRM TO FURTHER EXAMINE THE BROADWAY ROAD STABILITY NEAR THE END OF ROYAL OAKS CUL-DE-SAC.
  - EXAMINE SHORT-TERM AND LONG-TERM TRAFFIC IMPACTS
  - GATHER FEEDBACK FROM RESIDENTS AFFECTED BY THE BRIDGE CLOSURE ON BOTH SIDES OF THE RIVER
  - RETURN TO THE CLAY COUNTY BOARD AND FARGO CITY COMMISSION WITH OPTIONS TO CONSIDER

QUESTIONS

02.22.2021

THE CITY OF Fargo FAR MORE
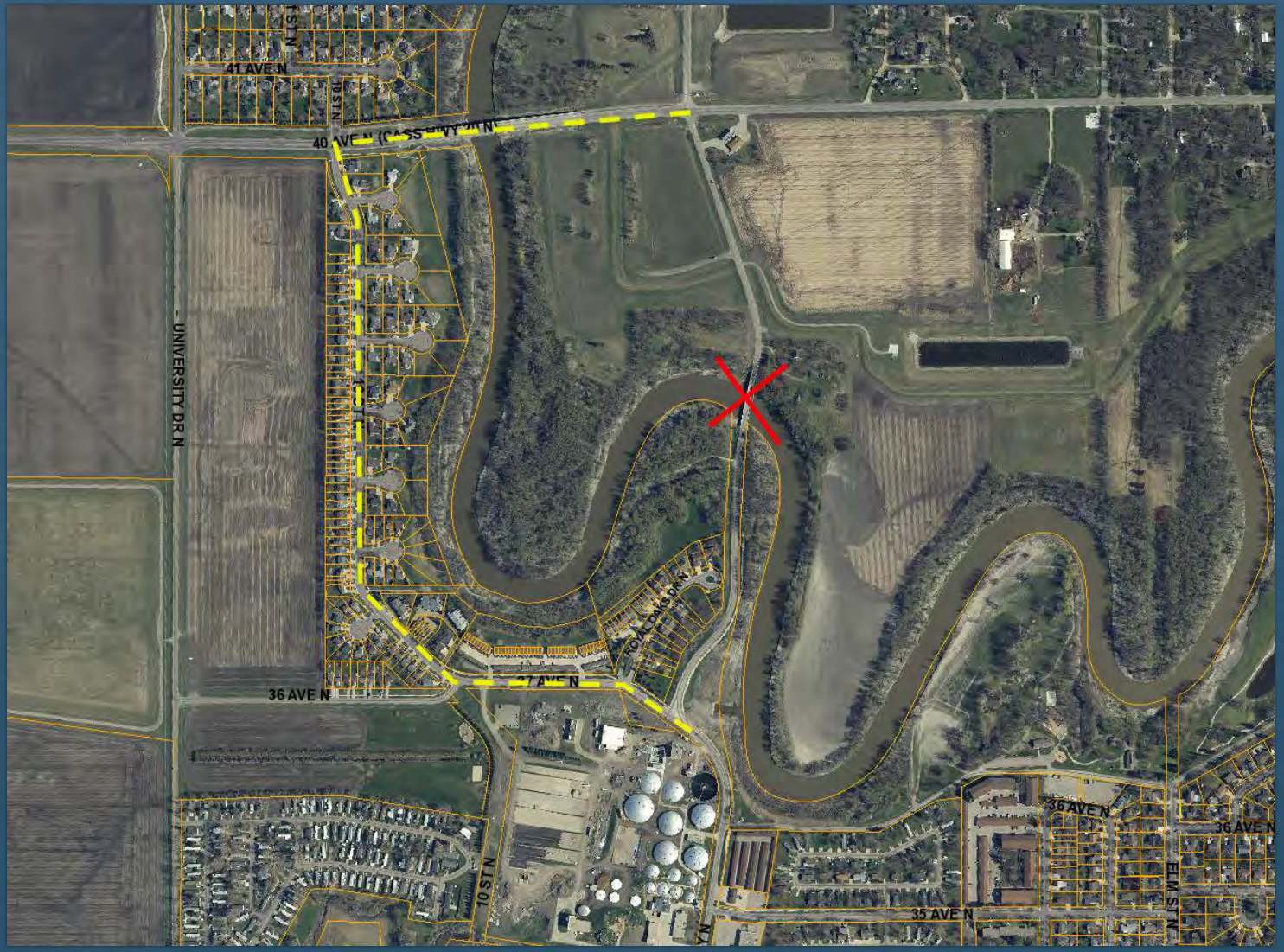
Current Detour Route