CITY OF FARGO SPECIFICATIONS
ASPHALT PAVING

PART 1
DESCRIPTION OF WORK

The work to be done under this section of the Specifications and the accompanying plans consists of furnishing all labor, material, accessories, and plant necessary to complete the asphalt paving of certain streets, avenues or alleys in the City of Fargo.

Excavation, filling, and subgrade preparation shall be in accordance with Section #2000. The work under this section of the Specifications shall also include the cleaning, drying and preparing the existing surface and the laydown of the bituminous material, rolling, adjusting manholes and valve boxes to grade, and all other work as may be necessary to properly complete the asphalt base course, wear course, and leveling course work in accordance with these Specifications and the accompanying plans.

PART 2
MATERIALS

All materials shall be obtained from approved sources. The materials used in connection with this work shall all conform to the latest revision of the applicable ASTM standard.

2.1. ASPHALT CEMENT

Asphalt cement shall be Performance Graded Asphalt Cement meeting the requirements of AASHTO MP1, PG 58-28 unless otherwise specified.

2.2. TACK COAT

The tack coat shall meet NDDOT requirements for tack coat. The tack coat to be used on any job shall be subject to the approval of the Engineer. Care shall be taken to prevent asphalt emulsions from freezing. Proper storage and handling techniques shall be used to prevent the asphalt emulsion from separating or breaking. Any emulsion that has separated or broken shall be rejected, and immediately removed from the jobsite. Emulsified asphalt for tack shall be diluted adequately to allow uniform spray application.

2.3. AGGREGATES

Aggregates shall be in accordance with Section 430 of the NDDOT Standard Specifications for Road and Bridge Construction, except gradations for leveling courses shall be as follows:

Sieve Size	% Passing by Weight
1/2”	100%
3/8”	85-100%
#4	50-80%
#10	35-65%
#30	25-45%
#100	5-20%
#200	3-10%
Maximum Shale and Soft Rock	4%
Maximum Clay	5%
Maximum Loss (L. A. Abrasion Test)	40%

2.4. SUPERPAVE MIX PROPERTIES AND RECYCLED ASPHALT PAVEMENT (RAP)

Superpave mix properties and RAP (if used) shall be in accordance with Section 430 of the NDDOT Standard Specifications for Road and Bridge Construction. The Superpave mix shall be FAA 43 unless otherwise specified.

2.5. WARM MIX ASPHALT AND ADMIXTURES

2.5.1 WARM MIX ASPHALT (WMA)

WMA technology may be used at the discretion of, and at no additional compensation to, the Contractor. Approved technologies for WMA include chemical additive and foaming processes (either by additive or mechanical means). Other methods must be approved by the Engineer prior to use.

If WMA is used, all manufacturers' recommendations for incorporating WMA technology into the mix shall be followed. All requirements in the Standard Specifications for the production and placement of conventional Hot Mix Asphalt mixtures are to be enforced except as noted herein. Prior to the use of WMA, the minimum plant mixing, delivery, placement and compaction temperatures that will achieve workability and density requirements shall be submitted by the Contractor to the Engineer. The Engineer may suspend or eliminate the use of WMA on the project if any of the following conditions occur: rutting, segregation, surface voids, tearing, irregular surface, low density, raveling, stripping, or if pavement does not meet any other design criteria.

WMA mixtures using the foaming process must include a moisture sensitivity analysis, AASHTO T 283, on plant produced mix using the foaming process. The moisture sensitivity analysis shall be conducted the first day of plant production on the project to ensure the foaming process is not detrimental to the moisture resistance of the mixture. AASHTO T 283 gyratory specimens will be compacted to 7.0 ± 1 percent air voids. A Tensile Strength Ratio (TSR) value of 70 min. is required. If TSR values are low, the addition of lime or anti-strip agents to the mix will be required to meet the minimum TSR value. The degree of particle coating of the plan produced WMA mixture must be determined according to AASHTO T 195. AASHTO T 195 is a field test for visually determining whether the asphalt plant is properly producing WMA that is sufficiently coated with asphalt cement. A WMA mixture with percent coated particles ≥ 95.0

percent is required. Increasing the plant mixing time or making other plant adjustments may be necessary if the percent of coated particles is not met.

All costs associated with completing the moisture sensitivity analysis and providing the results to the Engineer along with all manufacturers' recommendations for the WMA technology shall be included in the price bid for other items.

2.5.2 ADMIXTURES

Admixtures for warm mix asphalt and cool weather paving shall be in accordance with NDDOT requirements.

Whenever an admixture is used, the admixture manufacturer's name and dosage rate and any changes to the original job mix formula must be submitted to the Engineer in the field prior to use. The admixture shall have no special handling requirements above and beyond those of the binder itself. If the admixture is added by the supplier or refiner, the admixture shall be added to the binder according to the admixture manufacturer's recommendations. If the admixture is added by the Contractor at the asphalt plant, the admixture shall be added according to the admixture manufacturer's recommendations and the plant shall be equipped with a metering device that records the rate of admixture application.

2.6. WATERTIGHT MANHOLE SEALS / CHIMNEY BARRIERS

Internal and external manhole chimney seals shall be as manufactured by Cretex Specialty Products, NPC, Inc. or approved equal. The sealing bands and all mounting hardware (screws, bolts, nuts, etc.) shall be Type 304 stainless steel.

Manhole chimney barriers shall be a molded polymer seal, designed to be incorporated into the chimney section of a manhole assembly, manufactured from medium density polyethylene as defined by ASTM designation D 1248, and have the following properties:

PROPERTY	TEST METHOD	VALUE
Melt Index	ASTM D-1238	4.5
Density	ASTM D-792	.938
Tensile strength at yield, psi	ASTM D-638	2800
Elongation at break, %	ASTM D-638	400
Flexural Modulus, tangent, psi	ASTM D-790	115,000
ESCR ASTM	D-1693	1000
UL-94 @ .060 & @ .120 thickness	UL-94	HB
Deflection Temp, 88 psi, °C	D-648	83
Deflection Temp, 264 psi, °C	D-648	42
Low Temp Impact, -40°C, ft-lb	ARM	68

2.7. EQUIPMENT

All equipment shall be in accordance with Section 430 of the NDDOT Standard Specifications for Road and Bridge Construction.

PART 3
CONSTRUCTION

3.1. MIX DESIGN AND TESTING

The mix design(s) shall be in accordance with Section 430 of the NDDOT Standard Specifications for Road and Bridge Construction.

Although nuclear density tests may be performed by the Engineer to verify densities, the Contractor is responsible for the quality of the finished product and should perform tests accordingly at his own expense.

The Engineer may, at his discretion, require the Contractor to submit representative samples of the materials he proposes to use prior to the delivery of the materials to the site of the work, and may, during the progress of the work, take samples and make tests to assure that the work is being performed in accordance with these Specifications. The Contractor shall cooperate in the making of such tests to the extent of allowing free access to the work, for the selection of samples.

Samples shall be obtained and tested in accordance with the latest ASTM methods of tests.

3.2. PREPARATION OF EXISTING SURFACE TO BE PAVED

3.2.1 AGGREGATE BASE

See Section 2070 of these Standard Specifications. Any unstable areas shall be repaired prior to beginning paving operations.

3.2.2 EXISTING PAVEMENT

All loose, pocketed, caked, or other deleterious material shall be removed from the existing pavement. Flushing or sweeping with hand or power brooms will be acceptable methods of cleaning the pavement.

On wear course and overlay projects, all depressions, dips, and cupped cracks in the existing pavement shall be filled by the use of a motor grader, tractor with bucket, or hand methods and well compacted before the asphalt overlay is applied with the bituminous paver. On certain streets where the centerline has settled, it may be necessary

to install a thin lift down the centerline of the section with the paver straddling that centerline.

3.3. TEMPERATURE AND WEATHER LIMITATIONS

Asphalt mix shall not be placed on a visibly wet surface, on a frozen roadbed, or when weather conditions prevent the proper handling or finishing of the mixtures. Presence of frost particles in the roadbed is sufficient evidence of being frozen.

For construction of base courses, the air temperature shall be at least 40° F and rising. For construction of wear courses and leveling courses, the air temperature shall be at least 45° F and rising. Paving outside these temperature limitations will require the Contractor to include in the mix an admixture for cool weather paving conforming to Section 2.5 above.

In any case, paving will only be allowed when the air and surface temperature are at least 33° F.

3.4. TACK COAT

Prior to paving a wear course, overlay, or subsequent lift of bituminous base course, a tack coat shall be applied to the existing surface. All contact surfaces of manholes, gutters, headers, etc. shall be painted with a thin uniform coating of tack oil prior to placing the asphalt mixture against them. The surfaces shall be clean and dry. The minimum application temperature shall comply with the latest recommendations of the asphalt institute. The target application rate of the tack oil shall be 0.05 GAL/SY for subsequent lifts, and closer to 0.10 GAL/SY for overlays of aged pavements unless otherwise directed by the Engineer.

3.5. BITUMINOUS MAT

The base course shall be a “lean” mix and the wear course shall be a “rich” mix. The target percent of oil and Maximum Theoretical Density of the mix shall be determined by the mix design submitted prior to the Contractor’s first project of the year. The mix shall be promptly transported to the site by trucks with tight, clean, boxes lubricated with an Engineer-approved release agent, that have been properly weighed on an approved platform scale.

The mix shall be spread by an approved paving machine as soon as possible after arriving at the site and before the mixture cools to an unworkable consistency. For hot mix, the minimum laydown temperature is 225° F for base and wear courses, and 275° F for leveling courses. Hand methods may be used in inaccessible areas. When the mixture is spread by hand, loads shall not be dumped any faster than can be properly distributed. The raking shall be skillfully and carefully done in such a manner that after the first pass of the roller, minimal back patching will be required.

Maximum lift thickness for base course shall be 3 1/2 inch compacted; maximum lift thickness for wear course shall be 2 1/2 inch compacted. Adequate allowance shall be made for compaction in the spreading of the mixture. Longitudinal and transverse joints shall be well bonded and sealed. If necessary to obtain this result, the joints shall be cut back to the full depth of the previously laid course, painted with hot asphalt, and heated. All tack oil shall be applied prior to placing the asphalt mixture.

Immediately after the bituminous mixture has been spread, struck off, and surface irregularities corrected, it shall be thoroughly compacted by rolling. Compaction shall consist of the initial or breakdown rolling, intermediate rolling, and finish rolling. Rolling shall start as soon as the mixture will not unduly displace, rack or shove. Rolling shall begin at the sides of the road and work towards the crown. Mix along curbs shall be compacted by pinching the mix between the roller tire and the curb. Along forms, headers, walls and inaccessible areas, the mixture shall be compacted by mechanical tampers. Rolling shall proceed until all roller marks have been eliminated and densities of approximately 3-5 % air voids have been obtained. Compaction shall be by the NDDOT Ordinary Compaction method except as modified herein. Where nuclear density tests are taken, the average density shall be 90% or greater of the Maximum Theoretical Density (MTD).

Any areas that are under-compacted, become loose and broken, mixed with dirt, or defective in any way shall be removed and replaced with fresh hot mixture at the Contractor's expense.

3.6. OPENING TO TRAFFIC

Under the most favorable conditions for paving, the pavement shall be closed to traffic for at least 6 hours, and in warm weather for an additional time to be determined by the Engineer. The Contractor shall erect and maintain suitable barricades and lights to protect the pavement from traffic. Any part of the pavement damaged from traffic or other causes occurring prior to the acceptance of the pavement shall be repaired by the Contractor at his own cost and to the satisfaction of the Engineer.

The Contractor shall receive written notice from the Engineer to open the pavement to traffic and shall then dispose of all covering material as directed and remove all barricades.

3.7. LOCATION OF EXISTING UTILITIES

Existing manholes, gate valve boxes, and stop boxes have been shown to direct the Contractor's attention to their existence. The Contractor is cautioned that not all utilities have been shown and their location is not guaranteed. The Contractor is responsible for determining the exact location of existing utilities that affect the installation of the paving.

Prior to paving, the Contractor shall locate and mark all manholes and valve boxes that will be affected by the paving operation. Marking shall be accomplished using a marking device capable of showing the exact location of the center of the manhole or valve box after paving. In addition, all manholes and gate valves shall be double-tied to fixed objects outside the paving area. A copy of the tie sheets shall be given to the Engineer prior to paving.

3.8. WATERTIGHT MANHOLE SEALS / CHIMNEY BARRIERS

A watertight manhole seal or chimney barrier shall be installed on each sanitary sewer manhole not located in the street at the time of its final adjustment to grade.

Where chimney barriers are used, the bottom surface of the barrier flange shall be sealed to the manhole cone top surface using a butyl sealant as specified by the barrier manufacturer. The sealant shall be applied to the top surface of the manhole cone section only. The amount of sealant and its placement will be dependent on the condition of the cone. Sufficient sealant shall be used to accommodate flaws in the cone surface and "out-of-flat" conditions. The barrier shall then be centrally seated on the cone against the sealant. The bottom adjustment ring shall be centrally placed on the top surface of the barrier flange using no sealant. If plastic adjustment rings with a vertical tongue are being used, the tongue shall be cut off in accordance with the ring manufacturer's recommendations to allow the bottom ring to rest flush on the barrier flange.

Where internal seals are used, the sealing surface shall be clean and free of loose material and excessive voids. If the surface has minor irregularities, a bead of butyl-rubber caulking shall be applied to fill these voids. If the sealing surface is rough or has excessive voids, a low-shrink mortar sealing surface shall be installed. Any flanges or protrusions on the interior to the casting shall be removed and ground smooth. Seals shall be installed to a water-tight condition.

Where external seals are used, the Contractor shall install the seal in accordance with the manufacturer's recommendations. The exterior of the manhole and casting shall be wire-brushed clean, leveled and smoothed with a low-shrink mortar surface if necessary. Seals shall be installed to a water-tight condition.

3.9. CASTING TO GRADE (WITH CONCRETE, NO CONCRETE)

This item includes all labor, materials and equipment necessary to adjust the various manhole castings to the proper line and grade. For manholes located in the street on all wearing course projects and where specified by the Engineer, the Contractor shall center the adjusted casting in a min. 5.0' x 5.0' reinforced concrete square at an elevation level with the final wear course grade.

Changes in grade shall be made as follows:

All adjustments, including fine adjustments, shall be made with adjustment rings specified in Section 1500 of these Specifications. All adjustment rings shall be properly sealed in accordance with the manufacturer's recommendations and as follows: For storm sewer manholes/inlets, rings shall either be sealed watertight or be wrapped with nonwoven geotextile fabric, secured around the outside of the rings from three (3) inches below the top of the manhole/inlet structure to the top of the rings, overlapping the frame casting. For sanitary sewer manholes, rings shall be sealed water-tight from the frame casting to the manhole structure. In lieu of the use of an adhesive/sealant, an external mechanical frame-chimney seal may be used for a watertight installation.

Where casting adjustment requirements cannot be met by the use of engineered polymer adjustment rings and upon the Division Engineer's approval, the Contractor shall provide precast reinforced concrete adjusting rings. For fine adjustments of less than two (2) inches, steel shims shall be used to temporarily support the casting. The castings and rings shall be laid in a full bed of mortar. The rings and structure section shall be cleaned to assure a flat seating surface and the rings shall be installed in alignment with no noticeable offsets. A four (4) inch wide concrete encasement shall be placed around the outside of the rings from three (3) inches below the top of the structure to the frame casting.

Care shall be taken to adjust the casting to the proper grade so the final riding surface is smooth and free of bumps and it conforms to the alignment and grade of the adjoining asphalt. Any

castings not satisfying these requirements shall be redone to the satisfaction of the Engineer. Castings shall be set flush to the pavement surface.

The casting to grade item includes cleaning all construction debris and dirt from the manhole or inlet bottom and installing a wiped mortar finish around the inside and outside circumference of the precast concrete adjusting rings. Where encountered, existing watertight manhole seals shall be salvaged and replaced by the Contractor at no additional compensation. Where chimney barriers are installed or encountered, the gap between the barrier and the adjusted casting shall be filled with spray foam or other Engineer-approved material.

3.10. CASTING TO GRADE – (OVER DEPTH)

This bid item applies where more than 4 rings are required to make a casting adjustment, and shall include all labor, materials, and equipment necessary to make the adjustment in addition to the work described in Casting to Grade above.

3.11. CASTING TO GRADE (BOULEVARD)

This bid item shall be in accordance with either Section 1200 or 1500 of these Specifications, as applicable.

3.12. VALVE BOXES TO GRADE

This item shall include all labor, material, and equipment necessary to raise or lower valve boxes to the proper line and grade, including cleaning. Where called for on the plans and/or where specified by the Engineer, the Contractor shall center the gate valve box in a min. 3.0’ x 3.0’ reinforced concrete square at an elevation level with the final wear course grade.

Adjustments shall be made by turning the valve box up or down with a wrench. The use of adjusting rings will only be allowed when the top section of the valve box has already been turned up to its limit. Care shall be taken to adjust the valve box to the proper grade so the final riding surface is smooth and free of bumps and that it conforms to the grade of the adjoining pavement. Valve boxes shall be set flush with the finished pavement surface. Any valve boxes not satisfying these requirements shall be redone to the satisfaction of the Engineer.

The gate box to grade item also includes cleaning all debris and dirt from the box, ensuring that the box is straight and undamaged, and ensuring that the valve is operable.

PART 4
GUARANTEE, MEASUREMENT & PAYMENT

4.1. GUARANTEE

The guarantee shall be per the contract.

4.2. MEASUREMENT AND PAYMENT

Payment for all items shall be full compensation for all labor, material, equipment and miscellaneous items necessary for constructing these items in place.

4.2.1. DETERMINATION OF AMOUNT OF ASPHALT CEMENT USED

Quantities of asphalt cement in the mix will be determined by asphalt extractions taken by an independent testing laboratory. The conversion factor used will be 8.6 pounds per gallon.

4.2.2. DETERMINATION OF COMBINED AGGREGATE

The total weight for the bituminous mix shall be determined by the wet ton of material in trucks on an approved platform scale. The total weight of asphalt cement, as determined in part 4.2.2, shall be deducted from the total weight of the mix to determine the dry weight of the combined aggregate in tons.

4.2.3. METHOD OF PAYMENT

A. EXCAVATION AND SUBGRADE PREPARATION

Paid under Section #2000 contract bid items.

B. COMBINED AGGREGATE (DRY WEIGHT)

Paid for at the contract unit price per ton.

C. ASPHALT CEMENT

Paid for at the contract unit price per gallon.

D. ASPHALT MIX (INCLUDES ASPHALT CEMENT)

If the asphalt base course, wear course, or overlay is bid as containing the asphalt cement, the payment will be based on the wet tonnage, and there will be no adjustment for the aggregate or asphalt cement.

E. WATERTIGHT MANHOLE SEALS / CHIMNEY BARRIERS

Watertight seals and chimney barriers shall be paid for at the contract unit price per each, which shall include all costs for work to install the barrier or watertight seal as specified herein, including all casting modifications, mortar leveling, and concrete removal and replacement.

F. CASTINGS TO GRADE

This bid item shall include all work to adjust the casting with up to 4 rings, including all sealant, wrap, or chimney seals as specified herein. Adjustments to manholes located in the pave without concrete squares and adjustments to curb inlets shall be paid for under the "Casting to Grade – no Conc" bid item. Adjustments to manholes located in the pave with concrete squares will be paid for under the "Casting to Grade – w/Conc" bid item. Adjustments to inlets and manholes located outside the pave shall be paid for under the "Casting to Grade – Blvd" bid item.

On projects requiring concrete squares, the Contractor will be charged a penalty on a graduated scale for each casting that is not centered in the 5.0' x 5.0' concrete square as follows:

Center of Casting to Center of Concrete Square	**Penalty** (In the form of a negative extra item.)
0.0 feet to 0.25 feet	None.
0.26 feet to 0.50 feet	Deduct the greater of 15% or $90.
0.51 feet to 0.75 feet	Deduct the greater of 30% or $180.
Over 0.75 feet	Contractor shall remove, resize, and replace the concrete square at no additional cost to the City.

G. CASTING TO GRADE (OVER-DEPTH)

This bid item shall be paid for at the contract unit price per each, and shall include all costs for additional work required to adjust castings where more than 4 rings are required. Payment will be made for each increment of up to 4 rings beyond the initial 4 ring adjustment paid for under the Casting to Grade item.

H. VALVE BOXES TO GRADE

Adjustments to valve boxes located in the pave without concrete squares shall be paid for under the "GV Box to Grade – no Conc" bid item. Adjustments to valve boxes located in the pave with concrete squares will be paid for under the "GV Box to Grade – w/Conc" bid item. Adjustments to valve boxes located outside the pave shall be paid for under the "GV Box to Grade – Blvd" bid item.

On projects requiring concrete squares, the Contractor will be charged a penalty on a graduated scale for each gate valve box that is not centered in the 3.0' x 3.0' concrete square as follows:

Center of Cover to Center of Concrete Square	**Penalty** (In the form of a negative extra item.)
0.0 feet to 0.25 feet	None.
0.25 feet to 0.50 feet	Deduct the greater of 30% or $150.
Over 0.50 feet	Contractor shall remove, resize, and replace the concrete square at no additional cost to the City.

I. TACK COAT

Tack coat shall not be a bid item – all costs for tack coat shall be included in the price bid for other items.

4.2.4. OTHER COSTS

All other costs for work necessary to properly complete the work specified herein shall not be bid items; the costs shall be charged to other items unless a bid item is specifically included on the bid sheet.

ZONING CLASSIFICATIONS	NOMINAL STREET WIDTH	ASPHALT PAVEMENT WIDTH	ASPHALT THICKNESS AT CURB	ASPHALT THICKNESS AT CENTERLINE	AGGREGATE BASE THICKNESS	BASE COURSE CROSS SLOPE %
		A	B	C	D	
ALL SR AND MR LOCALS	24'	20'	7"	5.8"	7"	1.50%
	28'	24'	7"	5.6"	7"	1.50%
	30'	26'	7"	5.4"	7"	1.50%
	32'	28'	7"	5.3"	7"	1.50%
	36'	32'	7"	5.1"	7"	1.50%
	40'	36'	7"	5"	7"	1.57%
GO, TECH PARK LOCALS AND ALL COLLECTORS	28'	24'	9"	7.6"	8"	1.50%
	32'	28'	9"	7.3"	8"	1.50%
	40'	36'	9"	7"	8"	1.57%
	44'	40'	9"	7"	8"	1.67%
LC,GC,GI,LI LOCALS AND COLLECTORS	40'	36'	10"	8"	9"	1.57%

NOTES:
1) SUBGRADE AND AGGREGATE BASE CROSS-SLOPE SHALL BE 2.50%.
2) ND CLASS 31 WEAR COURSE REQUIRED FOR STREET WIDTHS IN EXCESS OF 40 FEET.
3) SEE DETAIL 2400-5.2 FOR WEAR COURSE / EDGE MILL AND OVERLAY DETAIL.

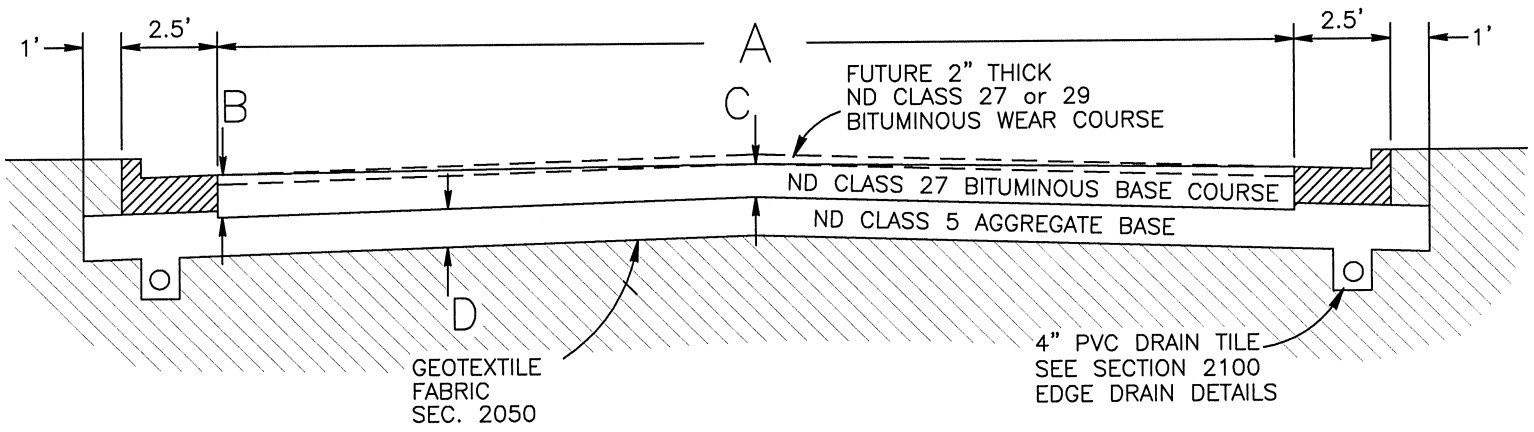

TYPICAL SECTION

NOTE:

Standard or Mountable Curb –

(1) Refer to the plans for type of curb to be used.

(2) Refer to proper Curb and Gutter Detail for curb dimensions.

(3) Refer to the Typical Concrete Valley Gutter Detail to be used on Asphalt Paving projects only if indicated on plans.

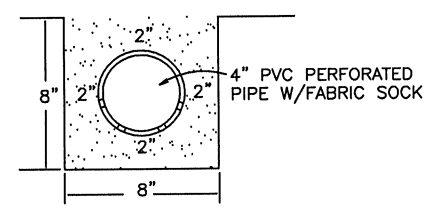

TRENCH DETAIL

SECTION NO. 2400 | DRAWING NO. 5.1

REV.D. 2014

LOCAL / COLLECTOR TYPICAL SECTION

CITY OF FARGO
ENGINEERING DEPARTMENT

APPROVED [signature] | DATE 12/18/13

NOTES:
1) 10' WIDE EDGE MILL EACH SIDE.
2) EDGE MILL SHALL BE 1.5" TO 2" DEEP AT CURB FLANGE.
2) ND CLASS 31 WEAR COURSE REQUIRED FOR STREET WIDTHS IN EXCESS OF 40 FEET.

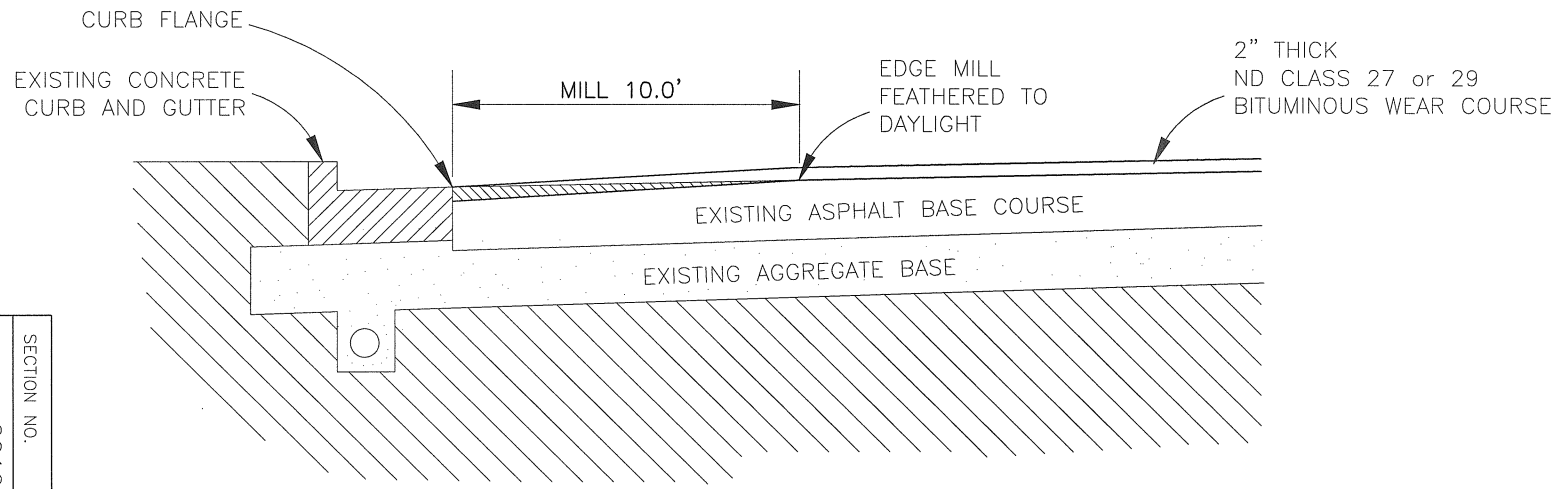

TYPICAL SECTION

CITY OF FARGO
ENGINEERING DEPARTMENT

WEAR COURSE AND EDGE MILL & OVERLAY

SECTION NO.	2400	DRAWING NO.	5.2
REV.D.	2012		
APPROVED	BED	DATE	2-21-2012

ASPHALT PAVEMENT WIDTH	LANES	ZONING CLASSIFICATIONS	PARKING	BACK–BACK MEASURE	AGGREGATE BASE WIDTH	ASPHALT THICKNESS		AGGREGATE BASE THICKNESS	CROSS SLOPE %	CROWN HEIGHT ABOVE OR BELOW TOP OF CURB	
						ASPHALT BASE	ASPHALT WEAR			STD	MNTBLE
				A	B	C	D	E			
30'	2	ALL SR & MR–1	NONE	31	33	7"	2"	8"	2.50%	1 1/2" BELOW	1/2" ABOVE
32'			ONE SIDE	33	35	7"	2"	8"	2.50%	1" BELOW	1" ABOVE
40'			BOTH SIDES	41	43	7"	2"	8"	2.50%	EVEN	2" ABOVE
30'	2	MR–2 & MR–3	NONE	31	33	7"	2"	8"	2.50%	1 1/2" BELOW	1/2" ABOVE
36'			ONE SIDE	37	39	7"	2"	8"	2.50%	1/2" BELOW	1 1/2" ABOVE
44'			BOTH SIDES	45	47	7"	2"	8"	2.50%	1/2" ABOVE	2 1/2" ABOVE
32'	2	ALL OTHERS	NONE	33	35	7"	2"	8"	2.50%	1" BELOW	1" ABOVE
36'			ONE SIDE	37	39	7"	2"	8"	2.50%	1/2" BELOW	1 1/2" ABOVE
44'			BOTH SIDES	45	47	7"	2"	8"	2.50%	1/2" ABOVE	2 1/2" ABOVE
60'	2	ALL ZONES	BOTH SIDES	61	63	7"	2"	8"	2.50%	EVEN	2" ABOVE
36'	3	ALL SR & MR	NONE	37	39	7"	2"	8"	2.50%	1/2" BELOW	1 1/2" ABOVE
40'	3	ALL OTHERS	NONE	41	43	8"	2"	9"	2.50%	EVEN	2" ABOVE

*NOTE: ND CLASS 31 WEAR COURSE REQUIRED FOR STREET WIDTHS IN EXCESS OF 40 FEET.

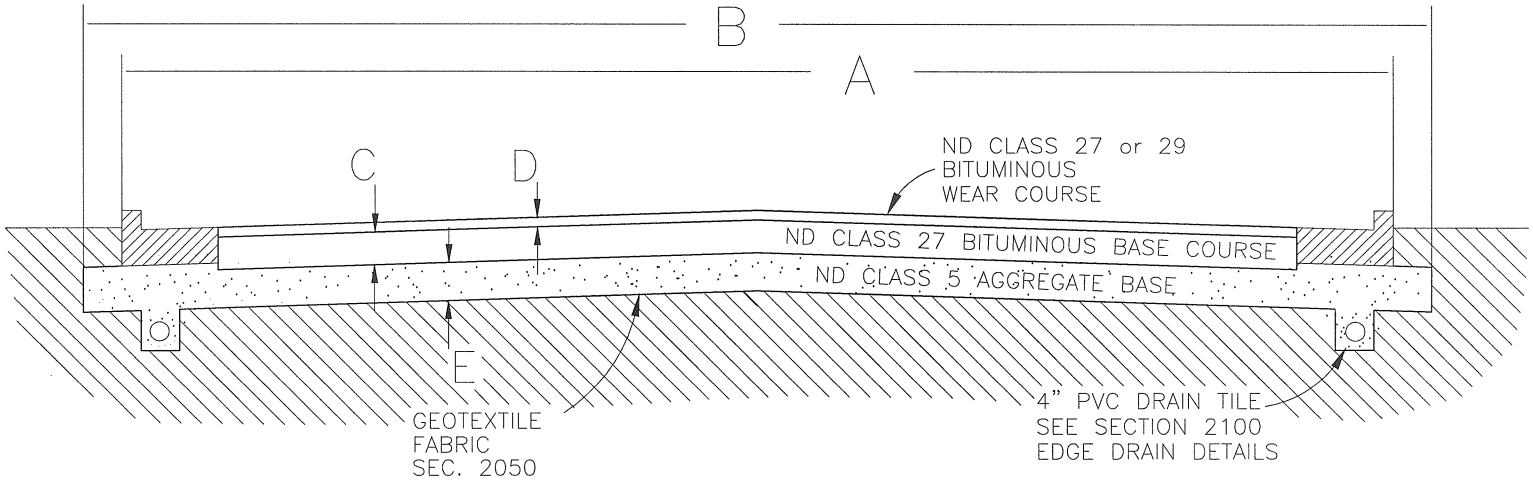

TYPICAL SECTION

NOTE:

Standard or Mountable Curb –

(1) Refer to plans for type of curb to be used.

(2) Refer to proper Curb and Gutter Detail for curb dimensions.

(3) Refer to the Typical Concrete Valley Gutter Detail to be used on Asphalt Paving projects only if indicated on plans.

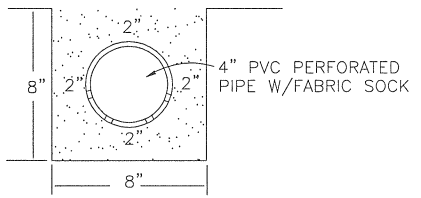

TRENCH DETAIL

CITY OF FARGO
ENGINEERING DEPARTMENT

ASPHALT PAVEMENT
PARKWAY STREET DETAILS

SECTION NO. 2400
DRAWING NO. 5.3
REV'D. 2012

APPROVED BED
DATE 2-21-2012

TYPE	LANES	ZONING CLASSIFICATIONS	WIDTH		GRAVEL BASE THICKNESS	TOTAL ASPHALT THICKNESS	DITCH BOTTOM WIDTH	R/W (Feet)
			PAVED	GRADED				
LOCAL	2	ALL SR & MR	26'	34'	6"	5"	8'	90 MIN.
	2	ALL OTHERS	26'	34'	6"	8"	10'	90 MIN.
ARTERIAL	2	ALL ZONES	30'	40'	6"	8"	10'	100 MIN.

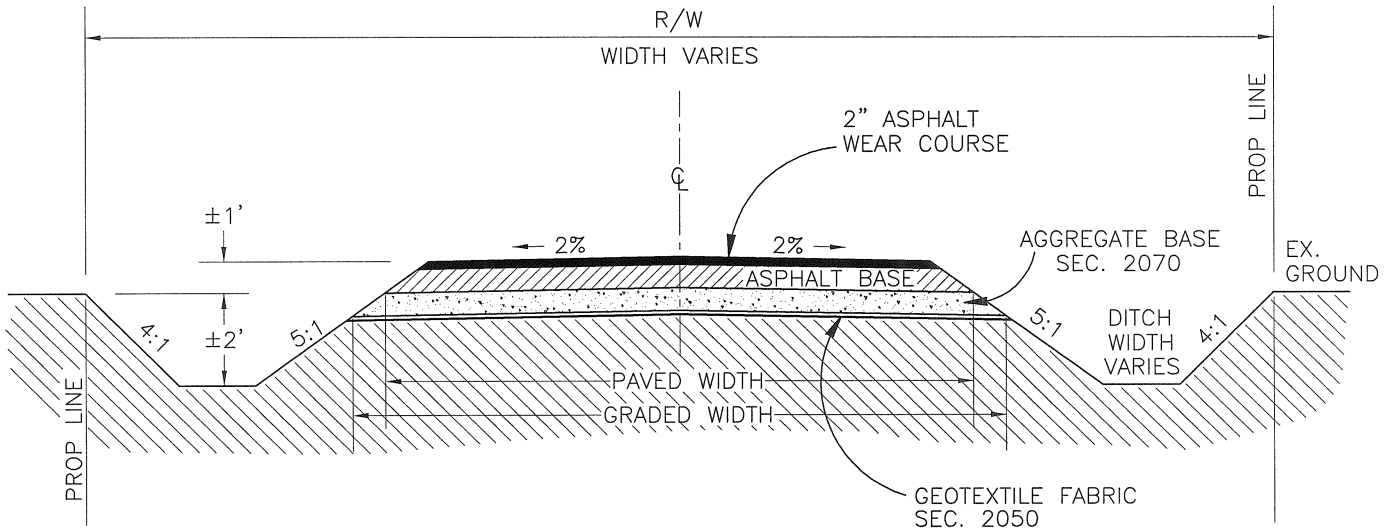

TYPICAL SECTION

RURAL ASPHALT
SECTION DETAIL

CITY OF FARGO
ENGINEERING DEPARTMENT

APPROVED BED DATE 2-21-2012

REV.D. 2012

SECTION NO. 2400

DRAWING NO. 5.4

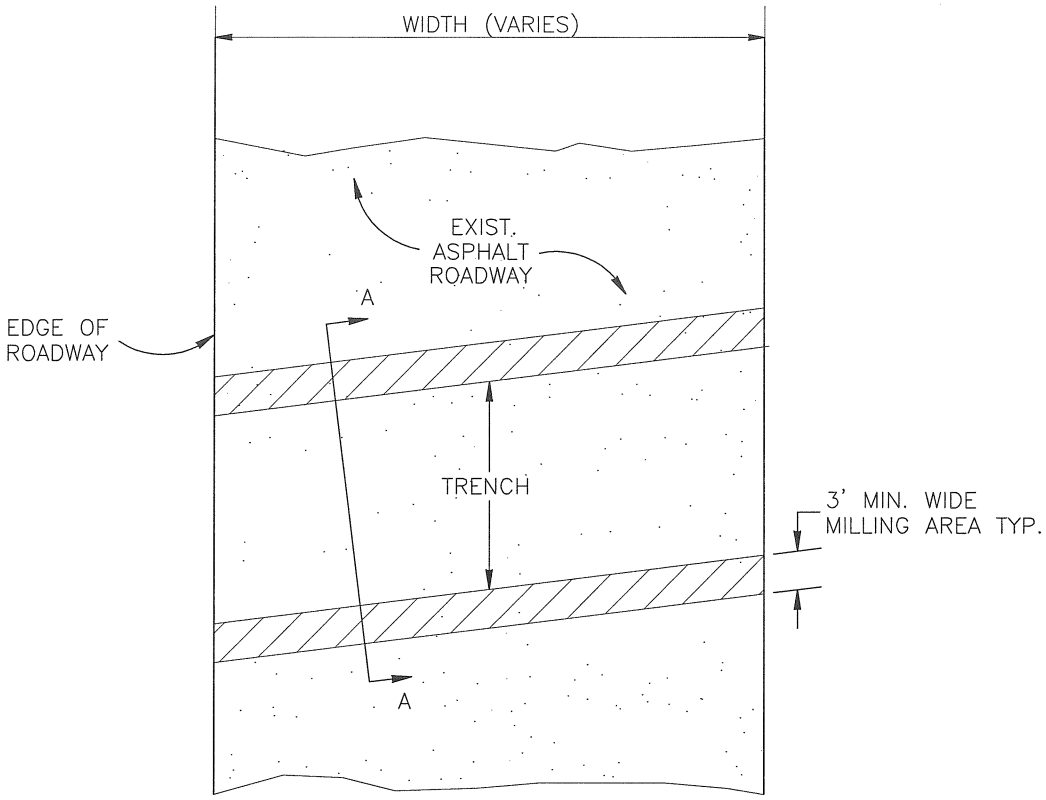

PLAN

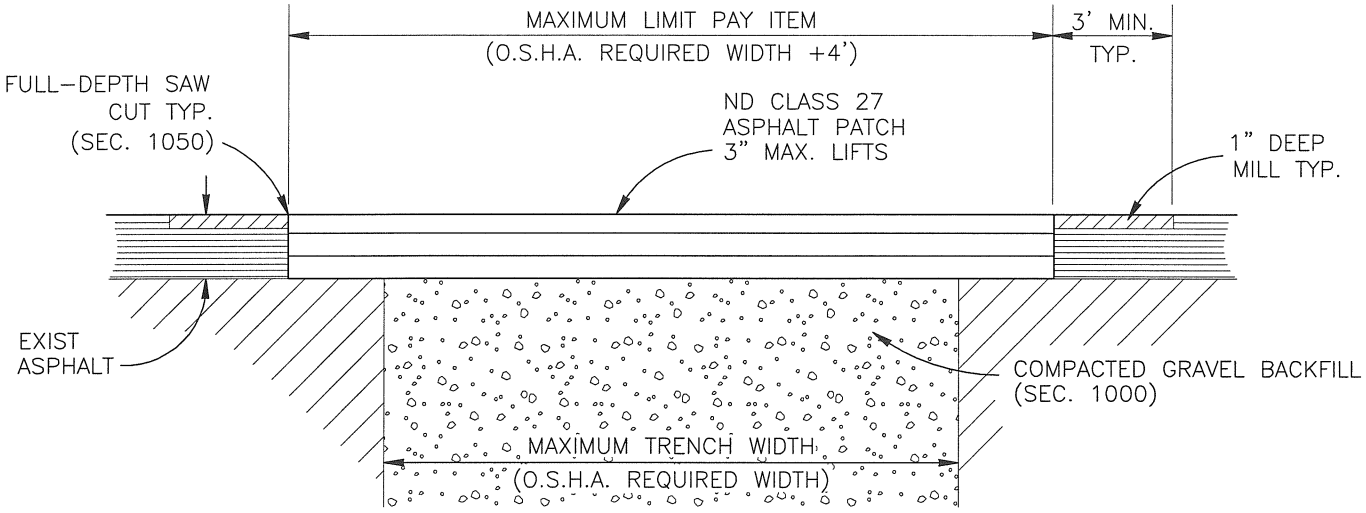

SECTION A-A

NOTES:

1. MATCH EXISTING ASPHALT THICKNESS UP TO 10" – INCLUDED IN SY PAY ITEM.

2. MILLING IS INCIDENTAL TO PATCHING.

SECTION NO. 2400	DRAWING NO. 5.5
REV,D. 2012	

ASPHALT PAVEMENT PATCHING DETAIL

CITY OF FARGO
ENGINEERING DEPARTMENT

APPROVED BEO	DATE 2-21-2012

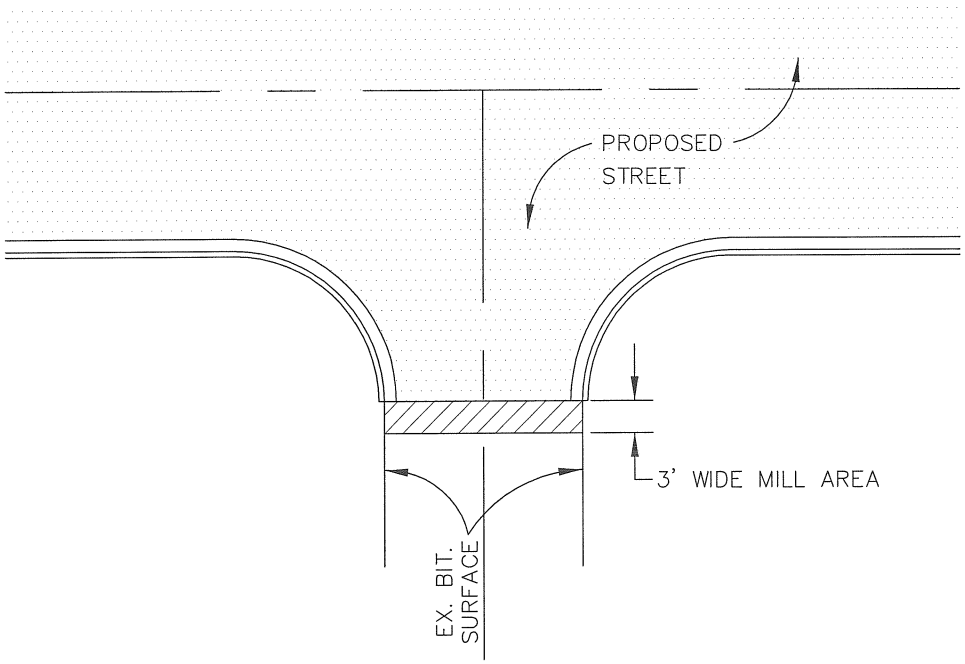

PLAN

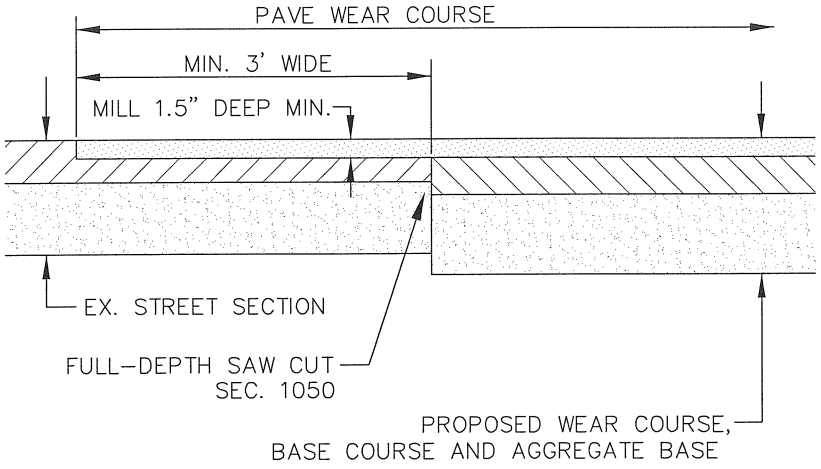

SECTION

SECTION NO. 2400	DRAWING NO. 5.6
REV,D. 2012	
MATCH EXISTING ASPHALT PAVEMENT	
CITY OF FARGO ENGINEERING DEPARTMENT	
APPROVED BED	DATE 2-21-2012

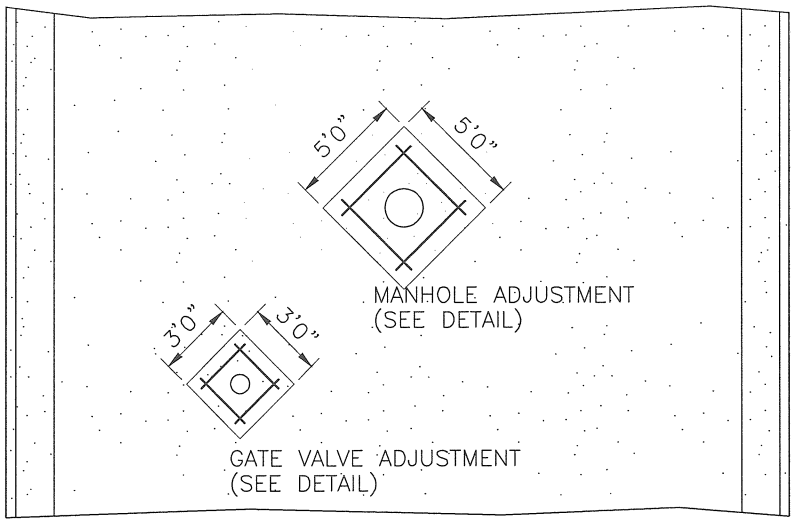

NOTES:
1) EXISTING WATERTIGHT MH SEAL SHALL BE SALVAGED AND REPLACED WHERE ENCOUNTERED.
2) WATERTIGHT MH SEAL OR CHIMNEY BARRIER SHALL BE INSTALLED WHERE NO EXISTING WATERTIGHT SEAL OR CHIMNEY BARRIER IS ENCOUNTERED.
2) THE MH FRAMES AND/OR GV BOXES NOT CENTERED IN THE CONCRETE SQUARE MAY BE SUBJECT TO PAY DEDUCTIONS. SEE SECTION 2400.4 OF THE STANDARD SPECIFICATIONS.
3) CONCRETE SHALL BE FLUSH WITH THE FINISHED PAVEMENT SURFACE.

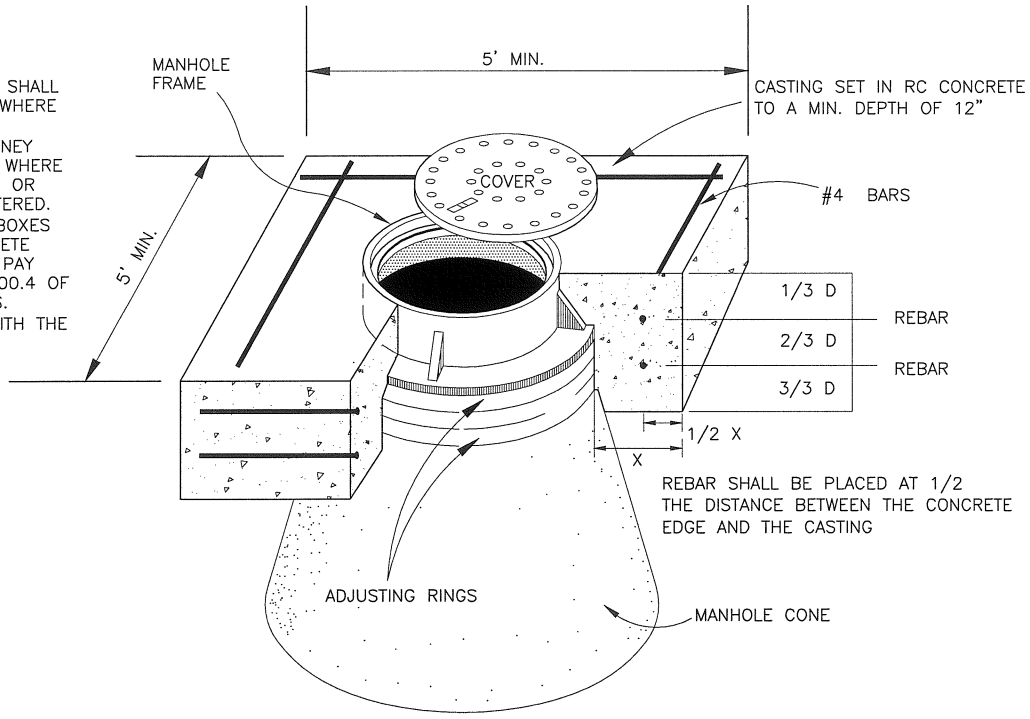

MH CASTING TO GRADE (WITH CONCRETE)

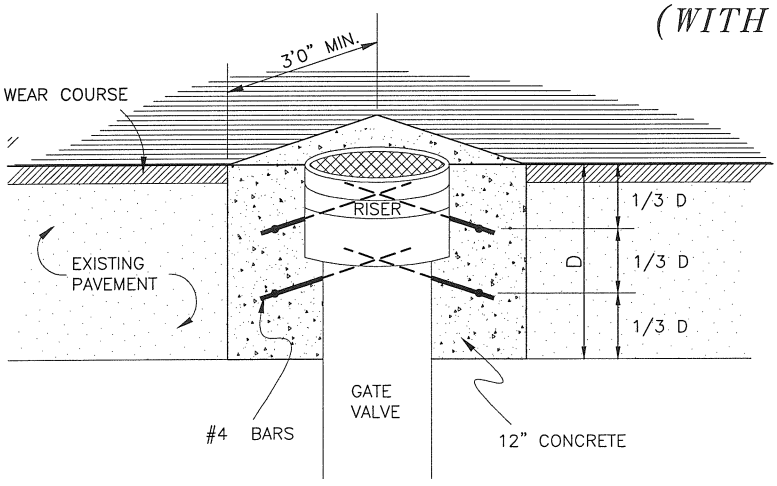

GATE VALVE BOX TO GRADE (WITH CONCRETE)

FOR ASPHALT OVERLAY AND FINAL WEAR COURSE PROJECTS

SECTION NO. 2400	DRAWING NO. 5.7
REV,D. 2012	

CASTING & G.V. BOX TO GRADE DETAIL (WITH CONCRETE)

CITY OF FARGO
ENGINEERING DEPARTMENT

APPROVED BED	DATE 2-21-2012