Floodproof Construction Requirements

CITY OF FARGO BUILDING
INSPECTION DIVISION
Updated April 2015

The State of North Dakota requires that you call *1-800-795-0555* at least two business days before you dig.

This handout does not address any covenants or easements assigned to the property, nor does it relieve you of code compliance with items which may not have been included from the International Codes.

REQUIREMENTS TO OBTAIN A BUILDING PERMIT FOR FLOODPROOF CONSTRUCTION

ALL PLANS MUST BE DRAWN TO SCALE

1. Floodproofing Certification Form from a State of North Dakota registered professional engineer. Required before Permit issuance.

2. Plot plan showing existing elevations of property.

3. Plot plan showing exact location of new building or addition and existing buildings.

4. Floor plan(s) of new building(s).

5. Elevation views of two sides of the building. Elevation plans must show grade.

6. Foundation wall sections showing required construction details per City flood proof specifications. (See enclosed details.)

7. Foundation plans showing drain tile location and footings.

THE FOLLOWING ITEMS ARE INCLUDED IN THIS PACKET

A. Typical Floodproofing Construction Requirements Exhibits

B. Foundation and basement wall structural details from *Floodproof Basement Structural Design Requirements Report*, created by KLJ, created December 17, 2014 and revised April 9, 2015.

C. **For informational purposes only – I**nspection log for foundation. Actual log is completed electronically and done by City of Fargo Inspection Department.

D. FEMA Residential Floodproofing Certificate.

E. FEMA Non-Residential Floodproofing Certificate.

A CERTIFICATE OF OCCUPANCY WILL BE REQUIRED BEFORE BUILDING OCCUPANCY

CITY OF FARGO POLICY STATEMENT FOR FLOODPROOFING ELEVATION REQUIREMENTS

Referenced to the following:

Fargo Municipal Code Article 21-06 (Flood Plain Management)
Floodproofing Code of the City of Fargo, North Dakota, prepared by Moore Engineering, Inc., Revised December 9, 1975

Applicable to the following:

This Policy Statement shall regulate development within City of Fargo City Limits and Extra Territorial Areas. The specific areas governed, by this policy are the FEMA 1% annual chance floodplain and the 41-foot water surface elevation inundation area.

I. All Structures

All structures, including but not limited to, residential, commercial, and industrial construction within the city limits and extra territorial areas shall meet the following requirements:

A. Floodway Setback
All structures must be set back 100' from floodway line

B. Watercourse Setbacks
All provisions of the Minimum and Limited Disturbance Setbacks zones as identified under City Municipal Code §20-0508 shall be met.

C. Primary Flood Protection Line
1. All properties adjacent to a river, drainage ditch or other flooding source, as determined by the City Engineer, must include a primary flood protection line.
2. Primary flood protection line elevation shall be FEMA Base Flood Elevation (BFE) plus 4.0'.
3. Primary flood protection line must be constructed throughout a proposed development (not on a lot by lot baisis) prior to issuance of any building permits.
   a. Plats approved by City Commission prior to March 4, 2014 may have a primary flood protection line constructed on a lot by lot basis. Protection line must be completed at the time of issuance of occupancy certificate.
4. Primary flood protection line shall be constructed according to the City of Fargo Standard Specifications, Section 3600.

D. Letter of Map Revisions (LOMR)
The City of Fargo encourages construction outside of the FEMA Special Flood Hazard Area (SFHA) and requires removal from the SFHA by Letter of Map Revision (LOMR) via fill or ring dike.
1. All fill placement shall follow the current City of Fargo Standard Specifications, Section 3600.
2. No more than five feet (5') of fill may be placed for buildings in areas removed from FEMA SFHA by LOMR
   a. Fill in excess of five feet may be permitted, provided the fill is Engineered fill designed by a State of North Dakota registered professional engineer and the design plan is provided to the City in advance of construction.
3. All structures constructed within LOMR areas must meet all floodproofing codes.

E. Infrastructure Elevations

1. All streets are to be constructed to a minimum of FEMA BFE minus 0.5’ at the low point (Back of Curb to be at FEMA BFE)
2. All sanitary sewer facilities, including private sewer connection manholes, cleanouts, etc. must be protected to an elevation equal to the FEMA BFE. Protection measures include sealing and/or elevating.
3. Storm sewer system shall be protected by infrastructure designed to be at or above an elevation of FEMA BFE plus 5.0'

F. Certifications

1. Elevation Certificates are required for all flood proofed structures.
2. Elevation Certificates for existing non flood proofed structures may be required if the structure is located in the FEMA SFHA.
3. Pre- Construction Floodproof Certification Form from FEMA is required for floodproof foundations, and must be provided to the City at the time the Building Permit is requested.

II. Single Family and Multi-Family Residential Structures Within 41-foot Water Surface Elevation Inundation Area (WSEIA) (See Exhibit A)

All construction within the 41-foot WSEIA as determined by the City Engineer shall meet all floodproofing codes, in addition to the following elevation and fill requirements:

A. Elevations

• *Lowest opening including area walls	Equal to 41-foot WSEIA plus 1.2’ Or equal to FEMA BFE plus 2.0’
• *Fill around building	Equal to 41-foot WSEIA plus 0.7’ Or equal to FEMA BFE plus 1.5’
• Fill 15’ away from buildings	At or above FEMA BFE

* Highest elevation of the two shall govern required minimum elevations

B. All underground parking must meet floodproofing codes, including the above specified elevation and fill requirements.

C. Elevations of detached, non-primary, slab on grade structures located on single and multi family lots shall have the elevation of the finished floor to be at or above the FEMA BFE plus 1.0’.

III. Single Family and Multi Family Residential Structures Outside the 41- foot WSEIA

A. Elevations

Lowest opening including area walls	Equal to 41-foot WSEIA plus 1.2’
Fill around building	Equal to 41-foot WSEIA plus 0.7’

B. Foundations — No special requirements

IV. All Structures (Excluding Residential) Within the FEMA 1% Annual Chance Floodplain (See Exhibit A)

All construction within the FEMA 1% annual chance floodplain as determined by the City Engineer shall meet all floodproofing codes, in addition to the following elevation and fill requirements:

A. Elevations

• *Lowest opening including area walls	Equal to 41-foot WSEIA plus 1.2' Or equal to FEMA BFE plus 2.0'
• *Fill around building	Equal to 41-foot WSEIA plus 0.7' Or equal to FEMA BFE plus 1.5'
• Fill 15' away from buildings	At or above FEMA BFE

* Highest elevation of the two shall govern required minimum elevations

B. All underground parking must meet floodproofing codes including specified elevation and fill requirements.

C. Structures within a contemplated LOMR area with a proposed depressed loading dock will be allowed to have the loading dock area below the specified adjacent ground elevations if the building is a slab on grade with the lowest finished floor elevation of the structure at the WSEIA plus 1.2'.

V. All Structures (Excluding Residential) Outside of the FEMA 1% annual chance floodplain (See Exhibit B)

A. Elevations

Lowest opening including area walls	Equal to 41-foot WSEIA plus 1.2'
Fill around building	Equal to 41-foot WSEIA plus 0.7'

B. Foundations

Setback dimensions are determined by the FEMA 1% annual chance floodplain polygon edges.

1. If building within 25-feet of the FEMA 1% chance floodplain, all construction must conform to all floodproof codes.
2. If building within 50-feet of the FEMA 1% chance floodplain, standard concrete foundations are required, floodproof construction is recommended.
3. If building is more than 50-feet from the FEMA 1% chance floodplain, there are no special requirements although floodproof construction is recommended.

APPENDIX A

TYPICAL FLOODPROOFING CONSTRUCTION REQUIREMENTS EXHIBITS

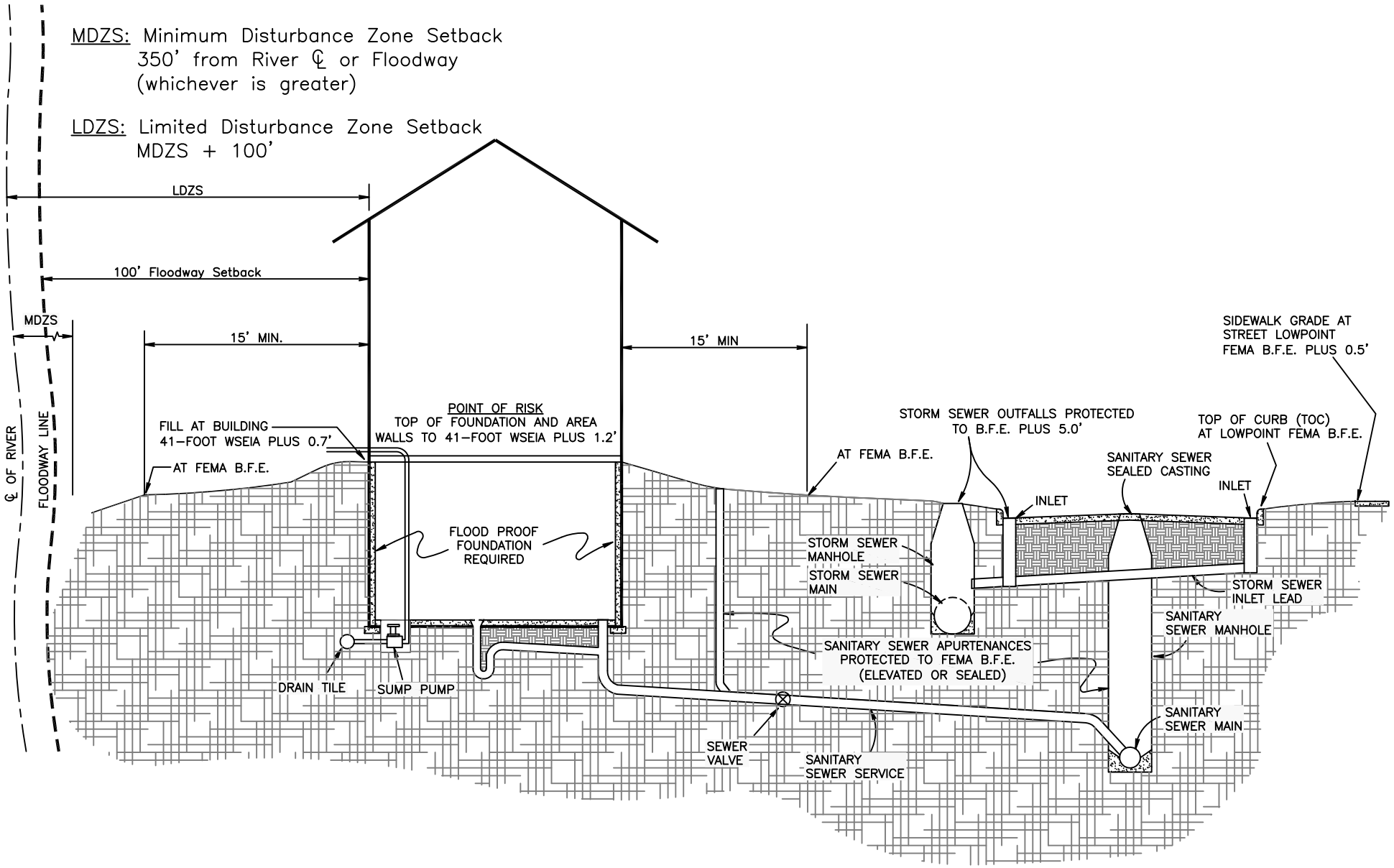

Single Family & Multi Family Residential Structures
within the 41.1 foot Water Surface Elevation Inundation Area

Non Residential Structures
within the FEMA 1% Annual Chance Floodplain

CITY OF Fargo
Engineering Dept.

Scale: NTS

Flood Proofing Construction Requirements Exhibit "A"

2/26/2014
T:\Engineering\Flood\Flood Proofing Code\Exhibits_KJR rev2.dwg

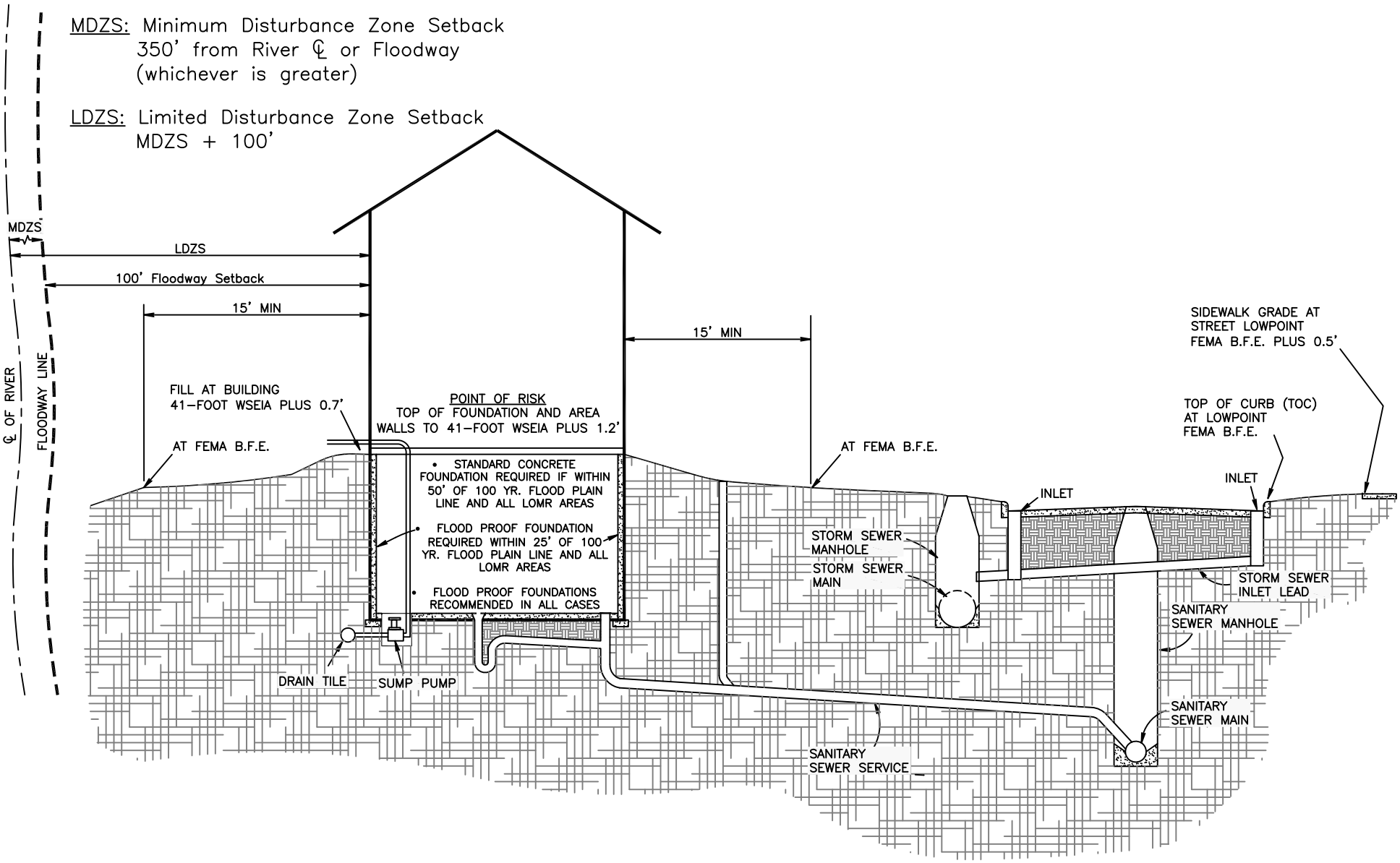

Non Residential Structures
within 50' of the FEMA 1% Annual Chance Floodplain

Scale: NTS

Flood Proofing Construction Requirements Exhibit "B"

City of Fargo
Engineering Dept.
2/26/2014
T:\Engineering\Flood\Flood Proofing Code\Exhibits_KJR rev2.dwg

APPENDIX B

FLOODPROOF BASEMENT STRUCTURAL

REQUIREMENTS REPORT

Prepared for:

City of Fargo
Engineering Department
200 3rd Street North
Fargo, ND 58102

Prepared by:

KLJ
728 East Beaton Drive
Suite 101
West Fargo, ND 58078

December 17, 2014
Revision 1: April 9, 2015

Structural Design Requirements

Floodproofed Basements in Fargo, ND

KLJ

Structural Design Requirements

Floodproofed Basements in Fargo, ND

Prepared for:

City of Fargo
Engineering Department
200 3rd Street North
Fargo, ND 58102

Prepared by:

KLJ
728 East Beaton Drive, Suite 101
West Fargo, ND

December 17, 2014

Revision 1: April 9, 2015

This document(s) was originally issued and sealed by Cassie McNames, Registration Number PE-5839 on April 9, 2015 and the original documents are stored at the City of Fargo Engineering Department, Fargo, ND. This media should not be considered a certified document.

TABLE OF CONTENTS

I. Executive Summary 1
II. Analysis 1
A. Seepage Analysis 1
B. Lateral Earth Pressures 2
C. Structural Design Requirements 2
D. Waterproofing 3
III. Conclusions 4

Appendix A: Geotechnical Report

Appendix B: Table and Figures

I. Executive Summary

KLJ and Braun Intertec (Braun) were asked to review the structural requirements of the City of Fargo's existing Floodproofing Code as they relate to current industry practices and design codes. The existing code has performed well under flooding conditions since its inception and has been tested multiple times including major floods of 1997 and 2009. However, the structural requirements have changed very little since it was first created in 1975. The recommendations included herein are based on industry standards and current building code requirements.

II. Analysis

Upon review of documents used to develop previous floodproofing codes, it was determined more information should be gathered related to the soils in the Fargo area and how they affect the structural design requirements for floodproofing basements. Braun prepared a geotechnical evaluation for this report which included a seepage analysis and recommendations for lateral earth pressures. Conclusions drawn from the geotechnical evaluation where used to develop the structural design requirements included herein.

A. Seepage Analysis

Braun was asked to perform a seepage analysis on the soils in the Fargo, North Dakota area. The results of their findings are included in Appendix A of this report. A summary of Braun's findings are as follows:

1) Based on discussions with the Fargo-Moorhead Home Builder's Association, foundations on most lots are currently being built on fairly shallow excavations. For the Fargo area, the soils at this depth are a part of the Sherack formation. The fill material brought in to build up the sites is also typically from this formation.

2) The soils in the Sherack formation are typically impervious, but some silt lenses are known to exist. The silt lenses can be troublesome as water can travel through them.

3) Laboratory testing was performed to determine the hydraulic conductivity of the soils in the Fargo area. Hydraulic conductivity is a measurement used to describe the flow of water through the soil. The tests indicate the soils in the Sherack formation have a hydraulic conductivity of 1E-4 foot per day vertically. Observation of local construction projects indicates the horizontal conductivity of 1E-3 foot per day. These numbers indicate the soils in the Fargo area are impermeable and water does not travel well through the Sherack. It should be noted, however, these values reflect well compacted material, and realistic values for backfill against homes would be "1 to 2 orders of magnitude faster."

4) Groundwater elevations vary throughout the year between five to ten feet below grade. Interviews with local homeowners indicated that bi-level basements (four feet below grade) had sump pumps that ran only during wet seasons and full depth basement sump pumps ran year round.

5) A seepage analysis concluded that basements with a 15 foot setback to the BFE (base flood elevation) would not infiltrate a house foundation for several months for a basement that is nine feet below grade. It was noted that if flood waters were allowed to reach the home during the peak flood the soil could become saturated causing hydrostatic pressures to be of concern. A peak flood was assumed to last "several days to 2 weeks before receding."

B. Lateral Earth Pressures

Braun recommends using an active equivalent fluid pressure of 65 pounds per cubic foot (PCF) per foot depth for soils in the Sherack formation to design basement walls. In order for this assumption to be accurate, the following criteria must be met:

1) Basements should have a flexible diaphragm and adequate subsurface drainage for this assumption to be accurate.

2) A wood floor and subfloor above the basement is considered a flexible diaphragm.

3) Adequate surface drainage must be provided around the perimeter of the home. If silt lenses or sand are found in excavations, the excavations should be over-excavated by at least ten feet horizontally from the basement walls and backfilled with fat clay soils, similar to that of the Sherack formation.

4) If flood water comes in contact with the house or backfill or if the drain tile/sump pump fails, considerations should be made to flood the basement to minimize structural damage due to hydrostatic pressures.

C. Structural Design Requirements

KLJ performed an analysis on basement wall construction for full depth basements and bi-level basements in Fargo based on the design parameters provided by Braun and design requirements detailed in the U.S. Army Corps of Engineers *Flood Proofing Regulations, EP 1165-2-314*. A summary of the analysis is included in the following sections.

DESIGN CODES:

Analysis of basement wall construction shall comply with the following building codes:

1) 2012 International Building Code (2012 IBC)

2) 2012 International Residential Code (2012 IRC)

3) American Concrete Institute 318-11: Building Code and Commentary (ACI 318-11)

4) 2012 National Design Specification (2012 NDS) for Wood Construction

STRUCTURAL LOADS:

1) Hydrostatic loads on the structure need not be considered with a 15 foot setback to the BFE. Under these conditions, Braun's seepage analysis determined it would take several months to saturate the soil adjacent to the basement walls. Given that peak floods only last about two weeks and homes are being constructed with a subsurface drainage system, the probability is very low that flood waters would reach foundation walls.

2) Hydrodynamic loads on the structure do not need to be considered. As per the *Flood Insurance Study* booklet prepared by FEMA for Cass County, North Dakota (effective January 16, 2015), the mean velocity of the Red River varies between 0.8 and 2.5 feet per second. The U.S. Army Corps of Engineers *Flood Proofing Regulations, EP 1165-2-314* states hydrodynamic loads need only be considered with velocities of five feet per second or greater.

3) Impact loads do not need to be considered as the probability that flood water elevations would exceed the ground elevation adjacent to the structure would be minimal.

4) Buoyancy is not a concern with flood and groundwater levels being maintained below the basement slab with a subsurface drainage system.

5) Basement walls and their connections shall be designed using an active equivalent lateral earth pressure of 65 PCF.

ANALYSIS:

KLJ completed a structural analysis on full height, bi-level and window well basement walls using the design codes and loads listed above. Tables and figures associated with the analysis are provided in Appendix B. A summary of the design procedure used to develop each table and figure is as follows:

1) Full height basement walls:

   a) Two reinforcing options are provided in Tables 1A and 1B.

      i) Case A includes provisions for 2-way slab action in the concrete walls to minimize the connection requirements at the top of the wall.

      ii) Case B also accounts for 2-way action in the concrete walls and allows for maximum spacing between walls perpendicular (i.e. jogs) to the foundation wall. Minimum reinforcing is based on the worst case between temperature and shrinkage steel or steel required to achieve moment capacity.

      iii) A detail of the reinforcing requirements is provided in Figure 1.

   b) The wall is required to be braced at the top where the trusses run parallel to the wall as per the requirements of Table 1B. An approved bracing detail is provided in Figure 5.

2) Bi-level basement design was based on a cantilevered concrete foundation wall. Reinforcing requirements are provided in Table 2 and a detail of the wall construction is provided in Figure 2.

3) Window well walls were designed to span horizontally. Reinforcing requirements are included in Table 3. A detail of the wall construction is provided in Figure 3.

4) Reinforcing requirements at wall corners and openings are provided in Figures 4A and 4B respectively.

D. Dampproofing

Dampproofing is required on the exterior surface of all basement walls and below all basement slabs. The dampproofing shall be continuous from the top of the soil to the top of the footing. The following recommendations meet the U.S. Army Corps of Engineers *Flood Proofing Regulations, EP 1165-2-314* Type B and the City of Fargo Flood Proofing Code (1975) Type D dampproofing. Dampproofing shall be required to be substantially impermeable but may pass water vapor and seep slightly during flooding.

1) Foundation wall: Foundation dampproofing shall meet the requirements of Section R406.1 of the 2012 IRC. In addition, the dampproofing shall have a minimum Class II perm rating.
2) Under slab: The under slab vapor retarder shall consist of a 10 mil polyethylene with a minimum Class II perm rating.

III. Conclusions

An active equivalent lateral earth pressure of 65 PCF shall be used as the basis of design for floodproofing basement structures. Tables and figures are provided in Appendix B to assist with construction of the wall construction types presented herein. The following conditions must be met to comply with the design recommendations included in this report:

1) Basement shall be constructed as per Exhibit A in the City of Fargo's *Floodproof Construction Requirements*.

2) Drain tile or other approved subsurface drainage be provided around interior and exterior basement perimeter and tied into an appropriately sized sump pit with a functioning sump pump.

3) The basement shall be dampproofed with the products included in this report (or approved equivalents).

4) In the event overtopping is eminent or the sump pump fails and is not able to be reinstated in a timely manner, it is recommended the basements be filled with clean water to minimize structural damage as a result of hydrostatic pressure and uplift.

Appendix A

Geotechnical Reports

Braun Intertec Corporation
526 10th Street NE, Suite 300
P.O. Box 485
West Fargo, ND 58078

Phone: 701.232.8701
Fax: 701.232.7817
Web: braunintertec.com

November 24, 2014 Project B14-07345

Cassie McNames, PE
KLJ, Inc.
728 East Beaton Drive, Suite 101
West Fargo, ND 58078

Re: Geotechnical Evaluation Letter
City of Fargo Project #MS-14-71
Floodproof Basement Structural Review
Fargo, North Dakota

Dear Ms. McNames:

This Geotechnical Evaluation Letter addresses geotechnical aspects of the City of Fargo's Floodproof Basement Structural Review.

Background

We understand the original design of the City of Fargo's floodproof basement was completed in 1975 and at that time the City was able to receive a basement exception from FEMA. As part of the current FEMA floodplain remapping process, the City is required to renew their basement exception with FEMA. As part of this renewal we understand KLJ is assisting the City with a structural analysis of the standard basement wall detail. The City requested that you engage a geotechnical engineer to provide recommendations for soil parameters to be used in design of the wall as well as a seepage analysis to estimate the timeframe for full saturation of soil adjacent a basement wall.

Information Reviewed

In preparation of this letter, we reviewed a number of documents and resources. These documents and resources are listed below along with some of the key takeaways we considered from each.

- August 27, 1974 letter from Soil Exploration Company to Ulteig Engineers, Inc. Re: Soil Pressures in the Fargo-Moorhead Area.
    - Design walls to withstand an equivalent fluid pressure of 120 pcf.
    - Install a drain tile system at the perimeter and below the floor to control uplift.
    - Backfill utility connection trenches with well compacted clayey soil to prevent easy flow nets for infiltrating water.
    - All sites should be checked by a knowledgeable individual to determine that there is not an unusual uniform silt condition present or pervious fill.
- February 24, 1975 letter from Soil Exploration Company to Ulteig Engineers, Inc. Re: Basement Soil Pressures in the Fargo-Moorhead Area.
    - Ulteig and SEC discussed several homes that were completely surrounded by floodwater for 2 weeks (although overland flow did not reach the basement walls). The homes were

not designed for a maximum soil pressure [120 pcf] and the basement walls were not affected by horizontal soil pressure.
    - A design of less than the maximum soil pressure should provide for construction detail that will insure the maximum stress will not occur.
    - A lesser design soil pressure value was not stated, but it was stated that a "solution within reasonable economic means can be obtained" if freestanding water will not be adjacent the walls, surrounding soils are cohesive and relatively impervious, a drain tile system is in place to collect seepage, easy flow channels to the structure be prevented, utility trenches should be backfilled with cohesive soils and well compacted, gravel fill under driveways and so forth should be kept above flood levels, adequate surface drainage must be maintained away from the structure, and down spouts and local runoff cannot allow ponding adjacent walls.
    - The homeowner should be informed that his basement is not designed to withstand full hydrostatic pressure and he should understand the necessity of maintaining the drain tile system and that if the system fails or if flood waters make approximate contact with the basement walls, the basement should be flooded.
- City of Fargo Code of Ordinances, Article 21-0102, Section 1610.1
    - Exception to International Building Code: Foundation walls extending not more than 9 feet below grade and laterally supported at the top by flexible diaphragms shall be permitted to be designed for active pressure.
- Home Builders Association meeting on October 15, 2014
    - Currently on LOMR lots, excavations to bottom of foundation level are typically about 1 to 3 feet below natural ground and the remainder of the pad is built up from there.

Discussion

Soils

The soils in the City of Fargo were deposited by Glacial Lake Agassiz and are rather consistent across the City. The soils within the typical basement depth of not more than 9 feet consist of what is known as the Sherack formation. As they exist in the upper 9 feet, materials from this formation are most often used as basement wall backfill and from our experience they are also most often used as fill on LOMR lots.

The Sherack formation consists of fat clay that is rather impervious, but is sometimes stratified with silt or sand seams and layers that will increase its hydraulic conductivity. The Sherack formation most often weighs about 115 pcf in its normal, wet condition. Numerous shear strength tests we have performed on material from the Sherack formation indicate that if well compacted it will have a typical internal friction angle of about 25 degrees. Since house pad excavations are relatively small in size, they limit the size of compaction equipment and the overall effectiveness of compaction effort. To account for this we have assumed the internal friction angle for wall design of about 2/3 this value, or 16 degrees. This assumption should not relieve the contractor from the need for compaction of the backfill.

The conductivity of the Sherack formation averages approximately 1E-4 ft/day vertically (as determined from our laboratory testing) and 1E-3 ft/day horizontally (as determined through the in-situ monitoring of pore water pressure dissipation on local embankment construction projects). The conductivity of backfill is highly variable and dependent on material type, placement and level of compaction. Well compacted backfill would likely have conductivity values similar to those stated for the Sherack formation, while poorly compacted backfill is likely 1 to 2 orders of magnitude faster.

Groundwater
Measured groundwater depths typically vary across the City with location and season, but we have found that most often groundwater is encountered within about 5 to 10 feet of the ground surface seasonally. With regards to sump pump operation, we interviewed 12 homeowners across the City with variability in location, age of home, and depth of basement. The responses were very consistent in that homeowners with split level structures, or 4-foot deep basements, had sump pumps that ran only during rainy periods and homeowners with full basements had sump pumps that ran outside of rainy periods and several stated year round. These interview results would support the groundwater measurements we have observed within 5 to 10 feet of the ground surface.

Analysis

We performed a seepage analysis using a finite element program called SEEP/W from GeoStudio. The analysis was performed for a home with soil conditions typical of the Fargo area. We assumed that the basement is 9 feet below the ground surface and that flood waters would not be closer than 15 feet from the basement wall. The 15-foot distance was selected as it is typically greater than the excavation width for a basement wall and it is also currently the requirement by the City of Fargo for the minimum distance from the BFE for flood proofing construction.

The analysis indicates that the flood waters would have to be in place for several months for water to infiltrate to the house foundation or even the normal backfill wedge against a house. Peak flood conditions in this area typically last several days to as much as about 2 weeks before receding. It should be noted that if flood water contacted a basement wall and covered the wall backfill, saturation of the backfill could occur within the normal timeframe of peak flood conditions.

Recommendations

For design of basement walls we recommend using an active equivalent fluid pressure of 65 pcf per foot of depth (this value does not include a factor of safety). This value assumes the soil conditions noted in the *Discussion* above, and that the wall has a flexible diaphragm, and also assumes that the house has a functioning drain tile system. Many basements are constructed above the groundwater, but even those that are below the groundwater (estimated at 1 to 2 feet maximum seasonally) can experience drawdown of the groundwater below the active pressure zone on the wall if a properly functioning drain tile system is in place.

To use this value we further recommend that grades within 10 feet horizontal of the perimeter of the house should be sloped down and away from the structure at a minimum gradient of 5 percent to prevent ponding, and all roof run-off should be collected by gutters and routed to drains with long downspouts, which are diverted to areas more than 5 to 10 feet from the structure.

If basement excavations encounter layers of sand or silt, the excavations should be constructed so that they extend at least 10 feet away from the basement walls, and the entire excavation should be backfilled with fat clay soils typical of the area to lessen seepage through the sand/silt layer towards the structure.

As noted by Soil Engineering Company, we agree that if flood water comes in contact with the house or wall backfill, or if the drain tile system fails during periods of flooding, the homeowner should consider flooding the basement to limit structural damage to the basement wall.

Remarks

In performing its services, Braun Intertec used that degree of care and skill ordinarily exercised under similar circumstances by reputable members of its profession currently practicing in the same locality. No warranty, express or implied, is made.

If you have any questions about this Letter, please contact Nate McKinney or Sean Swartz at 701.232.8701.

Sincerely,

BRAUN INTERTEC CORPORATION

Sean S. Swartz, PE
Principal Engineer

Professional Certification:
I hereby certify that this plan, specification or report was prepared by me or under my direct supervision and that I am a duly Registered Professional Engineer under the laws of the State of North Dakota.

REGISTERED PROFESSIONAL ENGINEER
NATHAN
McKINNEY
PE-6735
DATE 11/24/14
NORTH DAKOTA

Nathan L. McKinney, PE
Principal – Senior Engineer
Registration Number: PE-6735
November 24, 2014

Appendix B

Tables and Figures

Table 1A: Minimum Reinforcement Requirements for Floodproofed Basement Walls - Full Height Walls (65 pcf)

Case A: Allows for minimum anchorage at the top of the wall

Case B: Allows for maximum spacing between perpendicular walls

Wall Height (ft)	Case	Wall Thickness (in)	Vertical Reinforcing	Horizontal Reinforcing	Maximum Horizontal Distance between Perpendicular Foundation Walls (ft)[7]	Dowel Spacing (ft)
7.5	A	8	# 4 @ 24 " o.c.	# 4 @ 18 " o.c.	7.5	4'-0" o.c.
				# 5 @ 28 " o.c.		
				# 6 @ 40 " o.c.		
		10		# 4 @ 12 " o.c.		
				# 5 @ 18 " o.c.		
				# 6 @ 28 " o.c.		
		12		# 4 @ 9 " o.c.		
				# 5 @ 15 " o.c.		
				# 6 @ 21 " o.c.		
	B	8	# 4 @ 22 " o.c.	# 4 @ 24 " o.c.	15	1'-10" o.c.
			# 5 @ 30 " o.c.			
			# 6 @ 44 " o.c.			
		10	# 4 @ 24 " o.c.			
			# 5 @ 36 " o.c.			
			# 6 @ 52 " o.c.			
		12	# 4 @ 18 " o.c.			
			# 5 @ 28 " o.c.			
			# 6 @ 38 " o.c.			
8	A	8	# 4 @ 24 " o.c.	# 4 @ 18 " o.c.	8	2'-0" o.c.
				# 5 @ 28 " o.c.		
				# 6 @ 40 " o.c.		
		10		# 4 @ 12 " o.c.		
				# 5 @ 18 " o.c.		
				# 6 @ 28 " o.c.		
		12		# 4 @ 9 " o.c.		
				# 5 @ 15 " o.c.		
				# 6 @ 21 " o.c.		
	B	8	# 4 @ 18 " o.c.	# 4 @ 24 " o.c.	16	1'-6" o.c.
			# 5 @ 26 " o.c.			
			# 6 @ 40 " o.c.			
		10	# 4 @ 24 " o.c.			
			# 5 @ 36 " o.c.			
			# 6 @ 52 " o.c.			
		12	# 4 @ 18 " o.c.			
			# 5 @ 28 " o.c.			
			# 6 @ 38 " o.c.			
9	A	8	# 4 @ 24 " o.c.	# 4 @ 14 " o.c.	9	2'-0" o.c.
				# 5 @ 22 " o.c.		
				# 6 @ 28 " o.c.		
		10		# 4 @ 12 " o.c.		
				# 5 @ 18 " o.c.		
				# 6 @ 28 " o.c.		
		12		# 4 @ 9 " o.c.		
				# 5 @ 15 " o.c.		
				# 6 @ 21 " o.c.		
	B	8	# 4 @ 12 " o.c.	# 4 @ 24 " o.c.	18	1'-0" o.c.
			# 5 @ 18 " o.c.			
			# 6 @ 26 " o.c.			
		10	# 4 @ 16 " o.c.			
			# 5 @ 24 " o.c.			
			# 6 @ 36 " o.c.			
		12	# 4 @ 18 " o.c.			
			# 5 @ 28 " o.c.			
			# 6 @ 38 " o.c.			

Notes:

1. Chart is based on an active soil pressure of 65 pounds per cubic foot (pcf).
2. Reinforcing steel shall be ASTM A615 with a yield stress, F_y, of 60,000 pounds per square inch (psi).
3. Vertical reinforcing bars shall be placed between 1-1/2 and 2-1/2 inches from the inside face of the wall.
4. Minimum concrete stregnth, f'_c, shall be 3,000 pounds per square inch (psi).
5. Maximum height of soil against foundation walls is 6 inches below top of wall.
6. Backfill shall not be placed until first floor framing and sheathing is installed and fastened or adequately braced and the concrete floor slab is in place or the wall is adequately braced.
7. Minimum length of perpendicular wall or "jog" shall be 2 feet. Perpendicular wall shall be the same thickness and reinforcing as wall it supports, and may be up to 1'-0" less in height than foundation wall. Perpendicular walls must be placed on minimum 1'-8" strip footing placed integral with foundation wall footing. Window wells are considered to be a perpendicular wall.
8. Refer to Table 1B for connection requirements at the top of the wall.
9. Refer to Figure 1 for basement wall detail.
10. Refer to Figure 4A for reinforcing at wall corners.
11. Refer to Figure 4B for reinforcing at openings in walls.
12. Refer to Figure 5 for wall bracing at foundation walls parallel to floor trusses.

Table 1B: Minimum Connection Requirements for Floodproofed Basement Walls - Full Height Walls (65 pcf)

Case A: Allows for minimum anchorage at the top of the wall

Case B: Allows for maximum spacing between perpendicular walls

Wall Height (ft)	Case	Sill Plate	Optional Top Plate Nailing Pattern	Anchor Bolt	Connection @ Truss	Bracing @ Walls Parallel to Trusses[11]	
						Max. Spacing	Conn. to Sill Plate
7.5	A	2-2x	16d @ 6 " o.c.	1/2" ϕ @ 20 " o.c.	A34 @ ea. Truss	4'-0"	2-A35 Clips
				5/8" ϕ @ 26 " o.c.			
				3/4" ϕ @ 32 " o.c.			
	B	2-2x	16d @ 3 " o.c.	1/2" ϕ @ 11 " o.c.	2-A35 @ ea. Truss	2'-2"	2-A35 Clips
				5/8" ϕ @ 14 " o.c.			
				3/4" ϕ @ 18 " o.c.			
8	A	2-2x	16d @ 5 " o.c.	1/2" ϕ @ 18 " o.c.	A35 @ ea. Truss	3'-6"	2-A35 Clips
				5/8" ϕ @ 24 " o.c.			
				3/4" ϕ @ 30 " o.c.			
	B	2-2x	16d @ 3 " o.c.	1/2" ϕ @ 9 " o.c.	2-A35 @ ea. Truss	1'-10"	2-A35 Clips
				5/8" ϕ @ 12 " o.c.			
				3/4" ϕ @ 15 " o.c.			
9	A	2-2x	16d @ 4 " o.c.	1/2" ϕ @ 14 " o.c.	A35 @ ea. Truss	2'-9"	2-A35 Clips
				5/8" ϕ @ 18 " o.c.			
				3/4" ϕ @ 22 " o.c.			
	B	2-2x	16d @ 2 " o.c.	1/2" ϕ @ 8 " o.c.	2-A35 @ ea. Truss	1'-6"	2-A35 Clips
				5/8" ϕ @ 10 " o.c.			
				3/4" ϕ @ 12 " o.c.			

Notes:

1. Chart is based on an active soil pressure of 65 pounds per cubic foot (pcf).
2. Anchor bolts shall be ASTM F1554 Grade 36.
3. Minimum clear distance between bolt and edge of concrete shall be no less than 2 inches.
4. Minimum concrete stregnth, f'_c, shall be 3,000 pounds per square inch (psi).
5. Maximum height of soil against foundation walls is 6 inches below top of wall.
6. Backfill shall not be placed until first floor framing and sheathing is installed and fastened or adequately braced and the concrete floor slab is in place or the wall is adequately braced.
7. Refer to Table 1A for reinforcing requirements.
8. Refer to Figure 1 for basement wall detail.
9. Refer to Figure 4A for reinforcing at wall corners.
10. Refer to Figure 4B for reinforcing at openings in walls.
11. Refer to Figure 5 for wall bracing at foundation walls parallel to floor trusses.

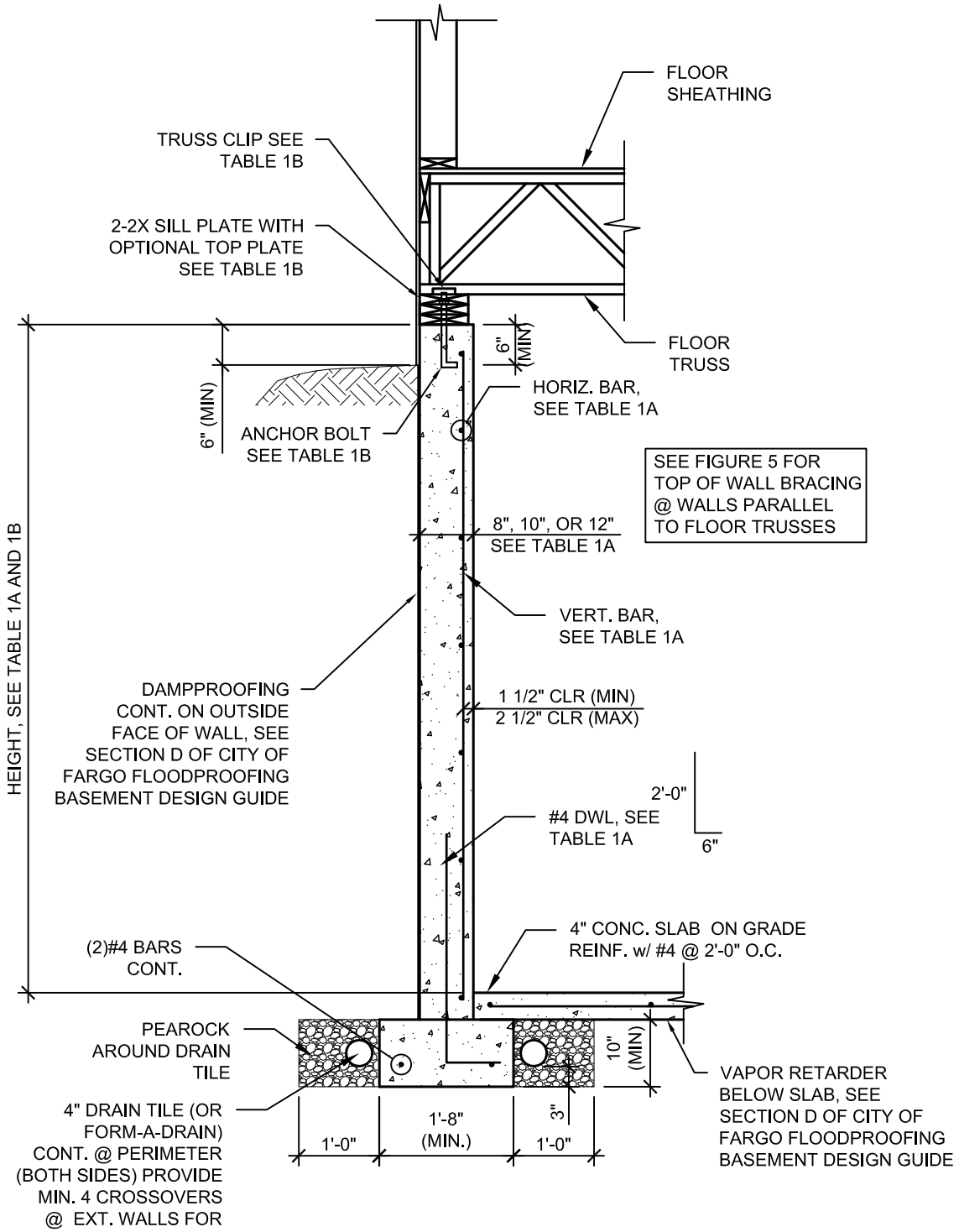

FIGURE 1: BASEMENT WALL SECTION

Table 2: Minimum Reinforcement for Floodproofed Basement Walls - Bi-Level Walls (65 pcf)

Wall Height, H (ft)	Wall Thickness (in)	Vertical Reinforcing	Horizontal Reinforcing
5 (max)	8	# 4 @ 18 " o.c.	# 4 @ 24 " o.c.
		# 5 @ 30 " o.c.	
		# 6 @ 40 " o.c.	
	10	# 4 @ 18 " o.c.	
		# 5 @ 26 " o.c.	
		# 6 @ 36 " o.c.	
	12	# 4 @ 12 " o.c.	
		# 5 @ 20 " o.c.	
		# 6 @ 28 " o.c.	

Notes:

1. Chart is based on an active soil pressure of 65 pounds per cubic foot (pcf).
2. Reinforcing steel shall be ASTM A615 with a yield stress, F_y, of 60,000 pounds per square inch (psi).
3. Vertical reinforcing bars shall be placed between 1-1/2 and 2-1/2 inches from the outside face of the wall.
4. Minimum concrete stregnth, f'_c, shall be 3,000 pounds per square inch (psi).
5. Maximum height of soil against foundation walls is 6 inches below top of wall.
6. Refer to Figure 2 for basement wall detail.
7. Refer to Figure 4A for reinforcing at wall corners.
8. Refer to Figure 4B for reinforcing at openings in walls.

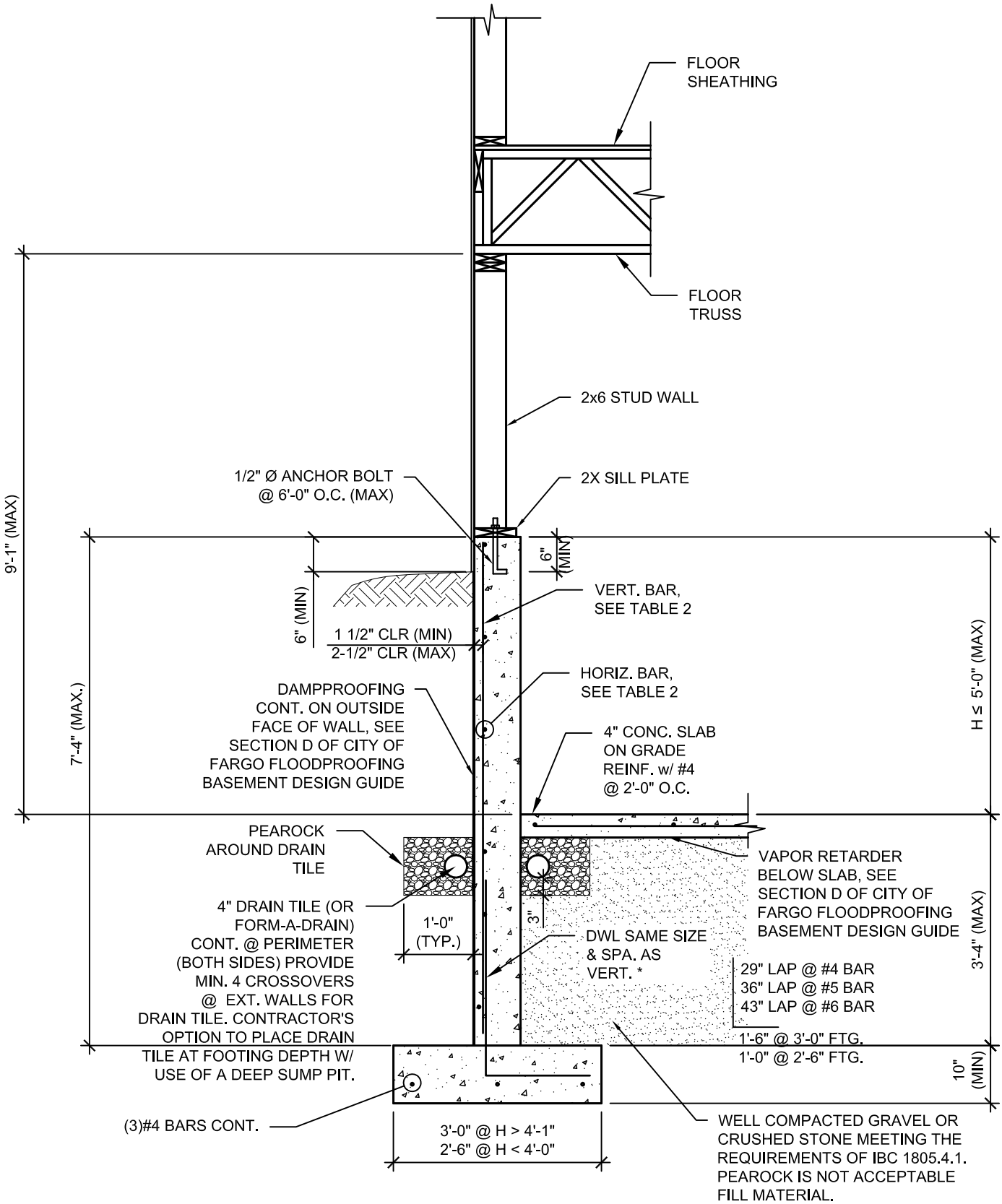

FIGURE 2: BI-LEVEL BASEMENT WALL SECTION

*NOTE: CONTRACTOR'S OPTION TO SUPPLY VERTICAL REINF. WITH HOOK INTO FOOTING AND OMIT DOWEL BAR.

Table 3: Minimum Reinforcement for Floodproofed Basement Walls - Window Well Walls (65 pcf)

Wall Height (ft)	Wall Thickness (in)	Horizontal Reinforcing	Vertical Reinforcing	Max. Horizontal Span between Perpendicular Foundation Walls (ft)[9]
7.5	6	# 4 @ 24 " o.c.	# 4 @ 24 " o.c.	4'-0"
		# 4 @ 18 " o.c.		5'-0"
		# 4 @ 12 " o.c.		6'-6"
	8	# 4 @ 18 " o.c.	# 4 @ 24 " o.c.	6'-0"
		# 4 @ 12 " o.c.		7'-6"
		# 4 @ 9 " o.c.		10'-0"
8	6	# 4 @ 24 " o.c.	# 4 @ 24 " o.c.	4'-0"
		# 4 @ 18 " o.c.		5'-0"
		# 4 @ 12 " o.c.		6'-6"
	8	# 4 @ 18 " o.c.	# 4 @ 24 " o.c.	6'-0"
		# 4 @ 12 " o.c.		7'-0"
		# 4 @ 9 " o.c.		9'-6"
9	6	# 4 @ 24 " o.c.	# 4 @ 24 " o.c.	3'-6"
		# 4 @ 18 " o.c.		5'-0"
		# 4 @ 12 " o.c.		6'-0"
	8	# 4 @ 18 " o.c.	# 4 @ 24 " o.c.	5'-6"
		# 4 @ 12 " o.c.		6'-6"
		# 4 @ 9 " o.c.		9'-0"

Notes:

1. Chart is based on an active soil pressure of 65 pounds per cubic foot (pcf).
2. Reinforcing steel shall be ASTM A615 with a yield stress, F_y, of 60,000 pounds per square inch (psi).
3. Vertical reinforcing bars shall be placed between 1-1/2 and 2-1/2 inches from the inside face of the
4. Minimum concrete stregnth,f'_c, shall be 3,000 pounds per square inch (psi).
5. Maximum height of soil against foundation walls is 6 inches below top of wall.
6. Refer to Figure 3 for basement wall detail.
7. Refer to Figure 4A for reinforcing at wall corners.
8. Refer to Figure 4B for reinforcing at openings in walls.
9. Minimum length of perpendicular wall shall be 2 feet. Perpendicular wall shall be the same thickness and reinforcing as wall it supports, and may be up to 1'-0" less in height than foundation wall. Perpendicular walls must be placed on minimum 1'-8" strip footing placed integral with foundation wall footing.

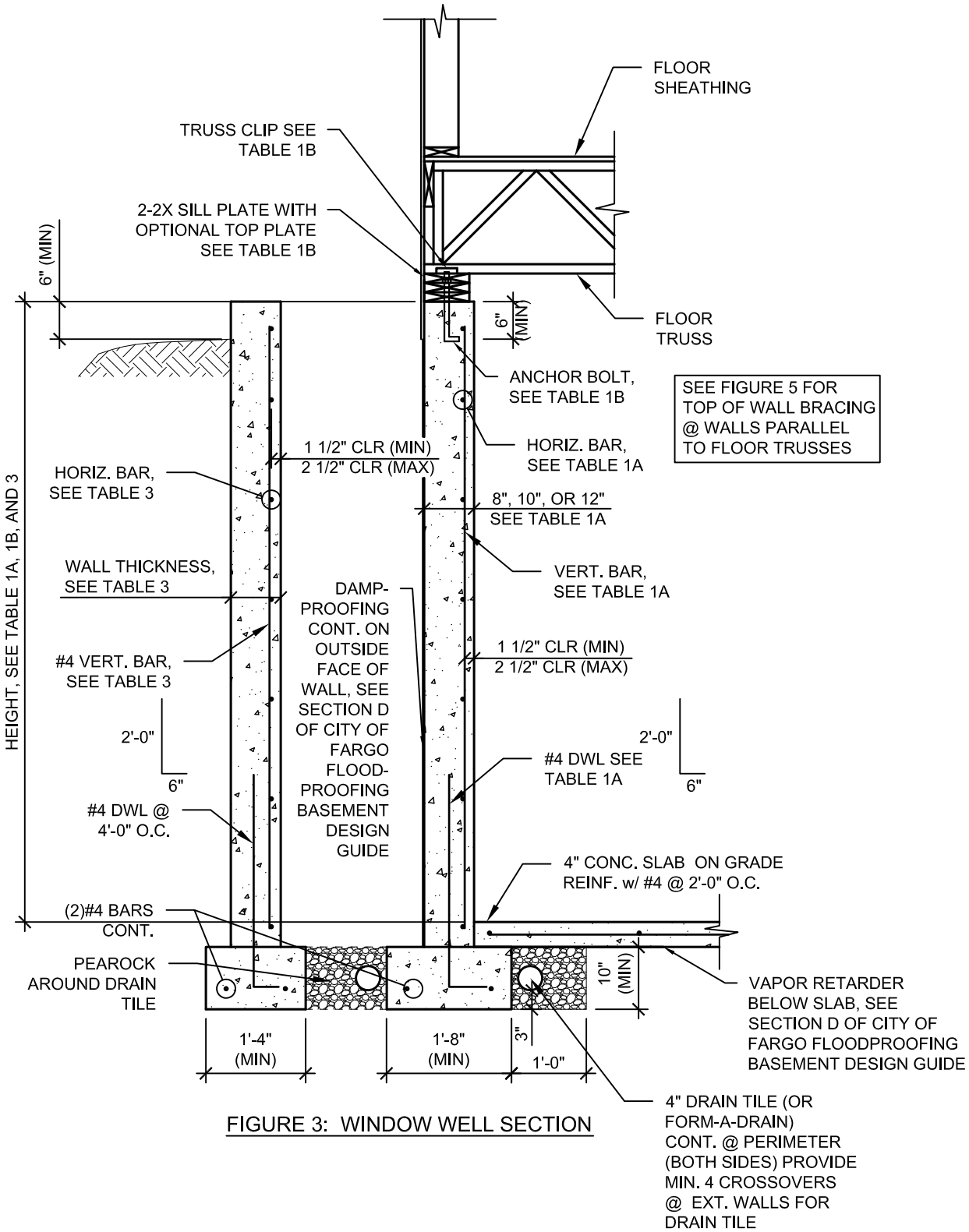

FIGURE 3: WINDOW WELL SECTION

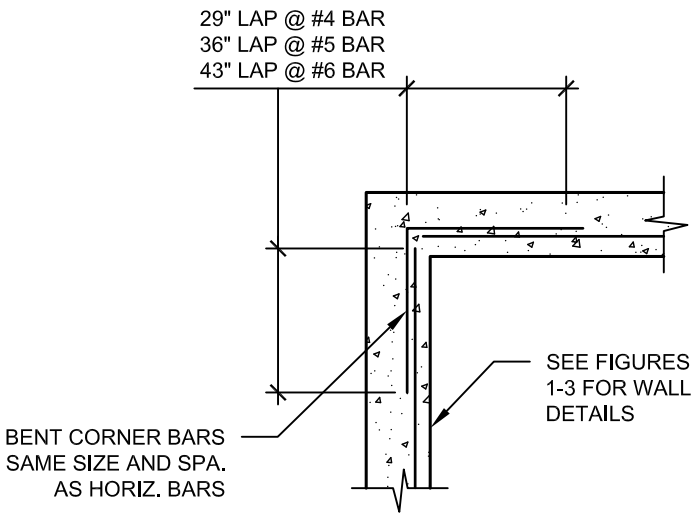

OR

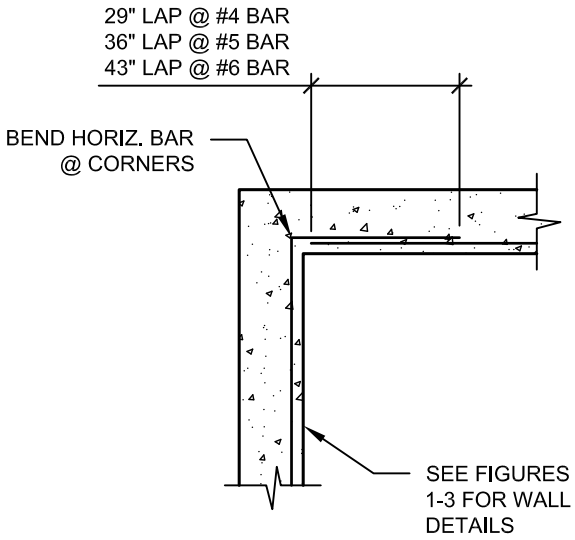

FIGURE 4A: TYP. CONC. WALL CORNER

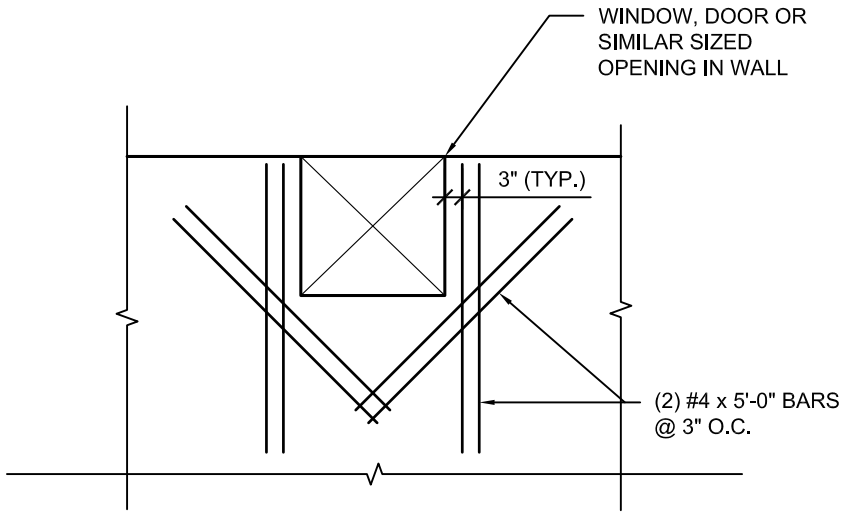

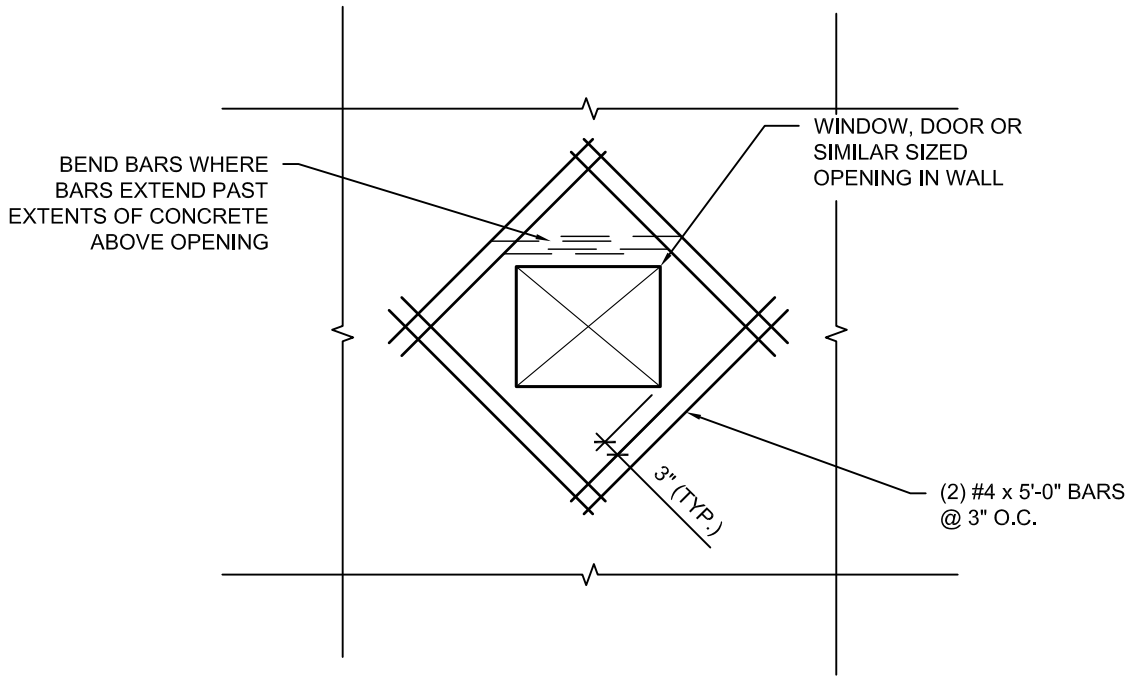

FIGURE 4B: REINFORCING @ WALL OPENINGS

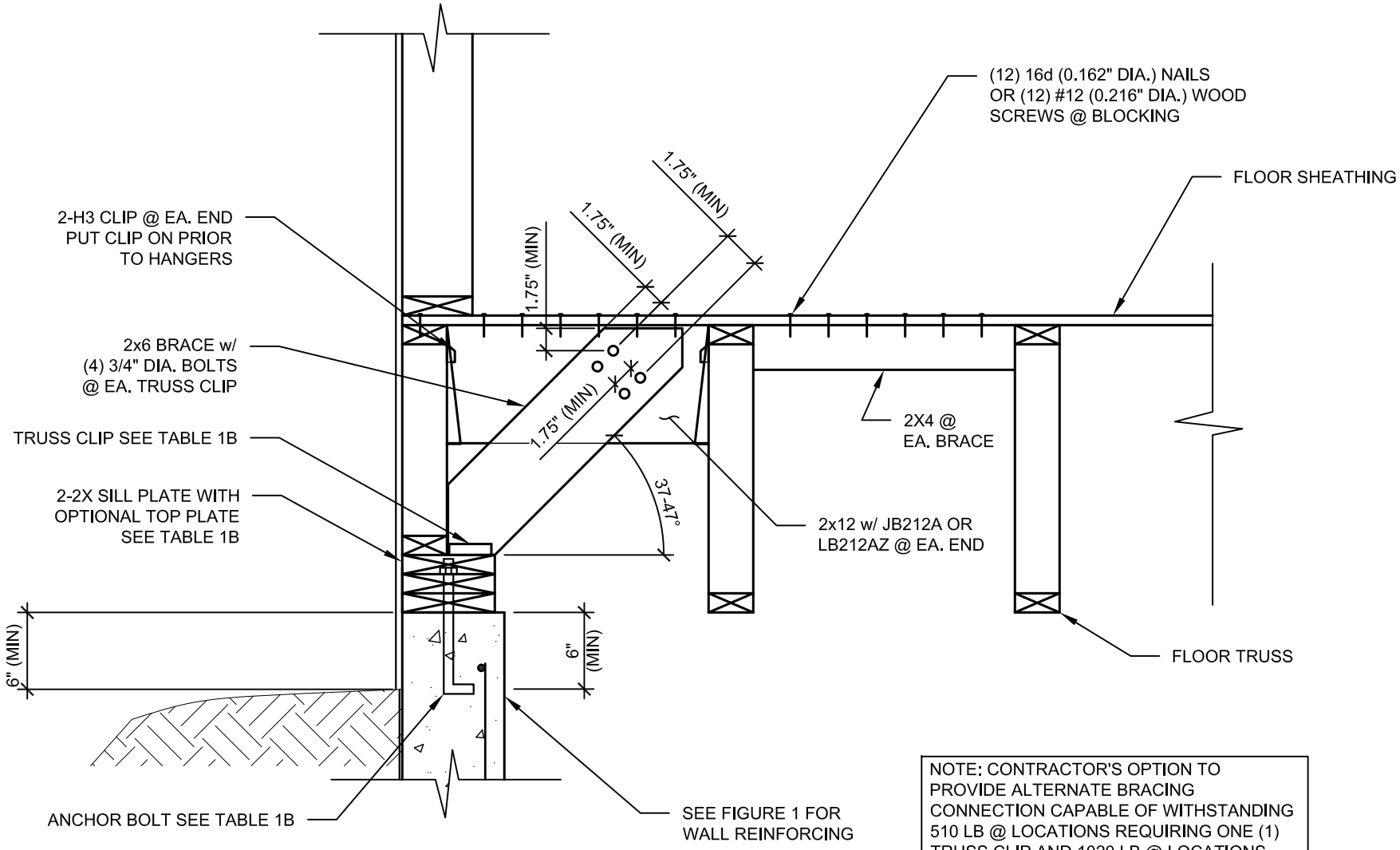

NOTE: CONTRACTOR'S OPTION TO PROVIDE ALTERNATE BRACING CONNECTION CAPABLE OF WITHSTANDING 510 LB @ LOCATIONS REQUIRING ONE (1) TRUSS CLIP AND 1020 LB @ LOCATIONS REQUIRING TWO (2) TRUSS CLIPS. DESIGN MUST BE STAMPED AND SIGNED BY AN ENGINEER REGISTERED IN THE STATE OF NORTH DAKOTA.

FIGURE 5: PARALLEL WALL BRACING

APPENDIX C

INSPECTION LOG FOR FOUNDATIONs

Fargo Inspections

City of Fargo
200 Third Street North
701-241-1561 phone
701-476-6779 fax

FLOOD PROOFING INSPECTION CARD*

Owner: _____

Address:_____

100 Year Flood Elevation:_____ Flood Protection Elevation: _____

Elevation Certification "Flood Protection Elevation"

Point of Risk: _____

Inspector: _____ Date:_____

1. Footing Date:_____Inspector:_____

   Comments: _____

2. Foundation Date:_____Inspector:_____

   Comments: _____

3. Waterproofing Date:_____Inspector:_____

   Comments: _____

4. Drain Tile Date:_____Inspector:_____

   Comments: _____

5. Sewer Line Date:_____Inspector:_____

   Comments: _____

6. Sewer Valve Date:_____Inspector:_____

   Comments: _____

7. Concrete Floor Date:_____Inspector:_____

   Comments: _____

APPENDIX D

FEMA RESIDENTIAL

FLOODPROOFING CERTIFICATE

Department of Homeland Security
Federal Emergency Management Agency

RESIDENTIAL BASEMENT FLOODPROOFING CERTIFICATE

See Reverse Side for Paperwork Burden Disclosure Statement

O.M.B. No. 1660-0033
Expires August 31, 2013

For use ONLY in communities that have been granted an exception by FEMA to allow the construction of floodproofed residential basements in Special Flood Hazard Areas.

BUILDING OWNER'S NAME	FOR INSURANCE COMPANY USE Policy Number
BUILDING STREET ADDRESS *(Including Apt., Unit Number)*	Company NAIC Number

OTHER DESCRIPTION *(Lot and Block Numbers, etc.)*

CITY	STATE	ZIP CODE

SECTION I – FLOOD INSURANCE RATE MAP (FIRM) INFORMATION

provide the following from the FIRM and flood profile *(from Flood Insurance Study)*

COMMUNITY NUMBER	PANEL NUMBER	SUFFIX	DATE OF FIRM	ZONE	BASE FLOOD ELEVATION (IN AO ZONES, USE DEPTH)	NAME OF FLOODING SOURCE(S) AFFECTING BUILDING

SECTION II – FLOODPROOFING INFORMATION *(By a Registered Professional Engineer or Architect)*

Floodproofing Design Elevation Information:

Building is floodproofed to an elevation of _____. ____feet.
(Elevation datum used must be the same as that on the FIRM.)

Elevation of the top of the basement floor is _____. ____feet.
(Note: The floodproofing design elevation must be at least one foot above the Base Flood Elevation [BFE])

SECTION III – CERTIFICATION *(By a Registered Professional Engineer or Architect)*

Residential Floodproofed Basement Construction Certification:

I certify that, based upon development and/or review of structural design specifications, and plans for construction, including consideration of the depth, velocity, and duration of flooding and the type and permeability of soils at the site, the design and methods of construction of the floodproofed basement to be used are in accordance with accepted standards of practice for meeting the following provisions:

- Basement area, together with attendant utilities and sanitary facilities, is watertight to the floodproofing design elevation with walls that are impermeable to the passage of water without human intervention; and
- Basement walls and floor are capable of resisting hydrostatic and hydrodynamic loads and the effects of buoyancy resulting from flooding to the floodproofing design elevation; and have been designed so that minimal damage will occur from floods that exceed the floodproofing design elevation; and
- Building design, including the floodproofing design elevation, complies with community requirements.

I certify that the information on this certificate represents my best efforts to interpret the data available. I understand that any false statement may be punishable by fine or imprisonment under 18 U.S. Code Section 1001.

CERTIFIER'S NAME	LICENSE NUMBER *(or affix Seal)*

TITLE	COMPANY NAME		
ADDRESS	CITY	STATE	ZIP
SIGNATURE	PHONE NO.		DATE

Copies of this certificate must be given to: 1) the community official; 2) the insurance agent; and 3) the building owner.

PAPERWORK BURDEN DISCLOSURE STATEMENT

Residential Basement Floodproofing Certificate

FEMA Form 086-0-24

Public reporting burden for this data collection is estimated to average 3.25 hours per response. The burden estimate includes the time for reviewing instructions, searching existing data sources, gathering and maintaining the data needed, and completing and submitting this Residential Basement Floodproofing Certificate. You are not required to respond to this collection of information unless a valid OM B control number is displayed in the upper right corner of this Residential Basement Floodproofing Certificate.

Send comments regarding the accuracy of the burden estimate and any suggestions for reducing the burden to: Information Collections Management, Department of Homeland Security, Federal Emergency Management Agency, 500 C Street, SW, Washington, DC 20472, Paperwork Reduction Project (1660-0033) **NOTE: Do not send your completed form to this address.**

APPENDIX D

FEMA NON-RESIDENTIAL

FLOODPROOFING CERTIFICATE

U.S. DEPARTMENT OF HOMELAND SECURITY
FEDERAL EMERGENCY MANAGEMENT AGENCY
National Flood Insurance Program

FLOODPROOFING CERTIFICATE
FOR NON-RESIDENTIAL STRUCTURES

OMB No. 1660-0008
Expiration Date: July 31, 2015

The floodproofing of non-residential buildings may be permitted as an alternative to elevating to or above the Base Flood Elevation; however, a floodproofing design certification is required. This form is to be used for that certification. Floodproofing of a residential building does not alter a community's floodplain management elevation requirements or affect the insurance rating unless the community has been issued an exception by FEMA to allow floodproofed residential basements. The permitting of a floodproofed residential basement requires a separate certification specifying that the design complies with the local floodplain management ordinance.

BUILDING OWNER'S NAME

STREET ADDRESS (Including Apt., Unit, Suite, and/or Bldg. Number) OR P.O. ROUTE AND BOX NUMBER

OTHER DESCRIPTION (Lot and Block Numbers, etc.)

CITY STATE ZIP CODE

SECTION I – FLOOD INSURANCE RATE MAP (FIRM) INFORMATION

Provide the following from the proper FIRM:

COMMUNITY NUMBER	PANEL NUMBER	SUFFIX	DATE OF FIRM INDEX	FIRM ZONE	BASE FLOOD ELEVATION (In AO Zones, Use Depth)

Indicate elevation datum used for Base Flood Elevation shown above: ☐ NGVD 1929 ☐ NAVD 1988 ☐ Other/Source: _____

SECTION II – FLOODPROOFING INFORMATION (By a Registered Professional Engineer or Architect)

Elevations are based on: ☐ Construction Drawings ☐ Building Under Construction ☐ Finished Construction

Floodproofing Design Elevation Information:

Building is floodproofed to an elevation of ____ . ____ feet (In Puerto Rico only: ____ . ____ meters). ☐ NGVD 1929 ☐ NAVD 1988 ☐ Other/Source: _____
(Elevation datum used must be the same as that used for the Base Flood Elevation.)

Height of floodproofing on the building above the lowest adjacent grade is _____ feet (In Puerto Rico only: _____ meters).

For Unnumbered A Zones Only:

Highest adjacent (finished) grade next to the building (HAG) ____ . ____ feet (In Puerto Rico only: ____ . ____ meters)

☐ NGVD 1929 ☐ NAVD 1988 ☐ Other/Source: _____

(NOTE: For insurance rating purposes, the building's floodproofed design elevation must be at least 1 foot above the Base Flood Elevation to receive rating credit. If the building is floodproofed only to the Base Flood Elevation, then the building's insurance rating will result in a higher premium.)

SECTION III – CERTIFICATION (By a Registered Professional Engineer or Architect)

Non-Residential Floodproofed Construction Certification:

I certify that, based upon development and/or review of structural design, specifications, and plans for construction, the design and methods of construction are in accordance with accepted standards of practice for meeting the following provisions:

The structure, together with attendant utilities and sanitary facilities, is watertight to the floodproofed design elevation indicated above, with walls that are substantially impermeable to the passage of water.

All structural components are capable of resisting hydrostatic and hydrodynamic flood forces, including the effects of buoyancy, and anticipated debris impact forces.

I certify that the information on this certificate represents my best efforts to interpret the data available. I understand that any false statement may be punishable by fine or imprisonment under 18 U.S. Code, Section 1001.

CERTIFIER'S NAME LICENSE NUMBER (or Affix Seal)

TITLE COMPANY NAME

ADDRESS CITY STATE ZIP CODE

SIGNATURE DATE PHONE

Copies should be made of this Certificate for: 1) community official, 2) Insurance agent/company, and 3) building owner.

FLOODPROOFING CERTIFICATE

FOR NON-RESIDENTIAL STRUCTURES

Paperwork Reduction Act Notice

General: This information is provided pursuant to Public Law 96-511 (the Paperwork Reduction Act of 1980, as amended), dated December 11, 1980, to allow the public to participate more fully and meaningfully in the Federal paperwork review process.

Authority: Public Law 96-511, amended; 44 U.S.C. 3507; and 5 CFR 1320.

Paperwork Burden Disclosure Notice: Public reporting burden for this data collection is estimated to average 3.25 hours per response. The burden estimate includes the time for reviewing instructions, searching existing data sources, gathering and maintaining the data needed, and completing and submitting this form. You are not required to respond to this collection of information unless a valid OMB control number is displayed on this form. Send comments regarding the accuracy of the burden estimate and any suggestions for reducing the burden to: Information Collections Management, Department of Homeland Security, Federal Emergency Management Agency, 1800 South Bell Street, Arlington, VA 20598-3005, Paperwork Reduction Project (1660-0008). **NOTE: Do not send your completed form to this address.**

Privacy Act Statement

Authority: Title 44 CFR § 61.7 and 61.8.

Principal Purpose(s): This information is being collected for the primary purpose of estimate the risk premium rates necessary to provide flood insurance for new or substantially improved structures in designated Special Flood Hazard Areas.

Routine Use(s): The information on this form may be disclosed as generally permitted under 5 U.S.C. § 552a(b) of the Privacy Act of 1974, as amended. This includes using this information as necessary and authorized by the routine uses published in DHS/FEMA-003 – National Flood Insurance Program Files System or Records Notice 73 Fed. Reg. 77747 (December 19, 2008); DHS/FEMA/NFIP/LOMA-1 – National Flood Insurance Program (NFIP) Letter of Map Amendment (LOMA) System of Records Notice 71 Fed. Reg. 7990 (February 15, 2006); and upon written request, written consent, by agreement, or as required by law.

Disclosure: The disclosure of information on this form is voluntary; however, failure to provide the information requested may result in the inability to obtain flood insurance through the National Flood Insurance Program or may be subject to higher premium rates for flood insurance. Information will only be released as permitted by law.