CITY OF Fargo

PLANNING AND DEVELOPMENT
200 Third Street North
Fargo, North Dakota 58102
Phone: (701) 241-1474
Fax: (701) 241-1526
E-Mail: planning@FargoND.gov
www.FargoND.gov

MEMORANDUM

Date: August 14, 2018

To: Community Development Committee

From: Nicole Crutchfield, Planning Director

Re: Community Development Committee Meeting on August 21

The next meeting of the Community Development Committee is Tuesday, August 21 at 2:30 in the City Commission Room at Fargo City Hall. If you are not able to attend, please contact the office at 701.241.1474. Thank you.

COMMUNITY DEVELOPMENT COMMITTEE
Tuesday, August 21 – 2:30 p.m.
City Commission Room
AGENDA

1. Welcome and Approve Order of Agenda
2. Approve Minutes
3. 402 Broadway North – Storefront Rehab
4. Consolidated Annual Performance and Evaluation Report (CAPER)
5. Presentation: Immigrant Development Center & Somali Community Development of ND
6. Presentation: Churches United and Winter Overflow
7. Updates on CLT
8. Discussion: 2019 Social Service Funds, application process
9. Public Comments
10. Adjourn

Community Development Committee meetings are broadcast live on cable channel TV Fargo 56 and can be seen live by video stream on www.FargoND.gov/streaming. They are rebroadcast each Monday at 10:30 a.m. and Thursday at 2:30 p.m.

People with disabilities who plan to attend the meeting and need special accommodations should contact the Planning Department at 701.241.1474 or TDD at 701.241.8258. Please contact us at least 48 hours before the meeting to give our staff adequate time to make arrangements.

Meeting minutes are available on the City of Fargo website at www.FargoND.gov/communitydevelopmentcommittee.

EQUAL HOUSING OPPORTUNITY

Printed on Recycled paper.

COMMUNITY DEVELOPMENT COMMITTEE
MINUTES

Regular Meeting: **Tuesday, May 15, 2018**

The Regular Meeting of the Community Development Committee of the City of Fargo, North Dakota, was held in the City Commission Room at City Hall at 2:30 p.m., Tuesday, May 15, 2018.

The Community Development Committee Members present or absent were as follows:

Present: Commissioner John Strand, Linda Boyd, Linda Klebe, Shara Fischer, Samantha McDonald, Ken Enockson, Thomas Hill (United Way), Sami Eidenschink (FM HBA), Kalley Norr (DCP)

Absent: Mayor Tim Mahoney, Michael Redlinger, Lynn Fundingsland

Item 1. Welcome
Chairperson Strand welcomed Members to the meeting and introductions were made.

Item 2. Approval of Minutes: Regular Meeting of April 17, 2018
Member Fischer moved the minutes of the April 17, 2018 Community Development Committee meeting be approved. Second by Member Eidenschink. All Members present voted aye and the motion was declared carried.

Item 3. 2017 Action Plan Amendment – Fraser Ltd. Project
Senior Planner Kristi Sylskar introduced the proposed amendment. Ms. Sylskar explained that amendments serve the purpose of aligning Community Development projects, goals, plans, and reports. She stated the proposed amendment would support facility upgrades of a care facility, which provides housing to adults with developmental disabilities.

Ms. Sylskar stated that the public comment period is now open until June 15, 2018.

Member Boyd moved to amend the 2017 Community Development Action Plan to accommodate a facility upgrade of the Fraser, Ltd. Intermediate Care Facility located at 2726 18th Street South. Second by Member Hill. On call of the roll Members Fischer, Boyd, McDonald, Hill, Enockson, Norr, Eidenschink, Klebe, and Strand voted aye. Absent and not voting: Members Mahoney, Fundingsland, and Redlinger. The motion was declared carried.

Item 4. Other Business
Planning Director Nicole Crutchfield introduced program coordinators from the Red River Human Services Foundation. Chief Executive Officer, Tom Newberger, and Activity Center Director, Phyllis Briss, of the Red River Human Services Foundation, presented a background and history of the Activity Center, the programs and services it provides, and the population it serves. Mr. Newberger thanked the Community Development Committee for its past support through Social Service funds and provided information about future funding needs and requests for the Activity Center.

Chair Strand noted that the City is in the budgeting process for 2019.

Item 5. Adjourn
The time at adjournment was 3:01 p.m.

CITY OF Fargo

PLANNING AND DEVELOPMENT
200 Third Street North
Fargo, North Dakota 58102
Phone: (701) 241-1474
Fax: (701) 241-1526
E-Mail: planning@FargoND.gov
www.FargoND.gov

MEMORANDUM

DATE: August 14, 2018

TO: Community Development Committee

FROM: Jasmine Markusen, Community Development Assistant Planner

RE: Storefront Rehab – 402 Broadway North

The property at 402 Broadway North is being considered for CDBG Storefront Rehab funding. The intent of Fargo's Storefront Rehab/Downtown Project program is to renovate deteriorated properties and eliminate blighted conditions in the downtown area. Interested property owners may apply for a 50% matching grant, up to $15,000 per façade, which can be used for the rehabilitation of building exteriors; demolition of blighted properties; or other exterior above-grade improvements. The Community Development Committee and Historic Preservation Commission review applications and recommend to the City Commission.

402 Broadway North

402 Broadway North was built in 1914. The proposed use of federal funding is for façade renovation. Over time, the building has experienced deterioration. The eligible components of the storefront renovation include:

- Painted aluminum framing, with a center-glazed 2" x 4-1/2" profile, taking cues from the narrow framing profiles of the historic storefront. High performance glazing, Solarban 70XL, will be utilized for its balance of energy performance and transparency. The narrow double door at the front will be replaced with a new single door to meet ADA clearance requirements. A dark granite base is being incorporated at the sidewalk level for durability and is in proportion to the original raised base of the storefront, though without window openings to the basement.

- The aluminum framing and panning will be a painted finish to match the medium bronze of the window framing at the 400 Broadway North storefront. The center pilaster, presumed to be a poured concrete column, will be clad with a steel skin, mimicking the cast iron pilasters flanking the 400 Broadway North storefront entry.

EQUAL HOUSING OPPORTUNITY

Printed on Recycled paper.

- The original brick and pilasters at each end of the storefront will be exposed and the condition assessed to determine whether restoration is possible or replacement with matching materials will be required. The cornice directly above the 402 storefront, removed in the 1938 remodel, will be replaced with a custom cast stone piece matching the color and profile of the original cornice.

The amount requested is $15,000 of the total $100,000 for the façade renovation. The recommendation is to approve $15,000 in matching grant. The application is attached.

Recommended Action: Recommend approval of the Community Development Block Grant Storefront Rehab at 402 Broadway North.

STOREFRONT REHAB & DOWNTOWN PROJECT APPLICATION

PRIMARY CONTACT INFORMATION FOR THIS APPLICATION			
Name	Craig Stenson		
Address	1600 University Avenue, Suite 212, St. Paul, MN 55104		
Phone	314.307.1035	**Fax**	
E-mail	cstenson@metroplains.com		
Property Address	400 Broadway, Fargo, ND 58102		
Applicant Name & DUNS number	400 Building Fargo, LLC (name of person/entity to receive grant)	181026279 (Enter DUNS number here)	
Architect/Firm	Shultz + Associates Architects (all applicants must use an architect for project design)		
Property Owner	400 Building Fargo, LLC		
Mailing Address	1600 University Avenue, Suite 212, St. Paul, MN 55104		

Description of Property			
■ **Current Commercial Tenants**			
Business Name	Business Owner	Address	Current sq. ft. occupied
Unoccupied	N/A	402 N Broadway	approx. 4200 SF

■ **Current Residential Tenants**	40 **# occupied**	1 **# vacant**
Tenant Name	Unit #	Mailing Address
see attached		400 N Broadway, Unit #

STOREFRONT REHAB & DOWNTOWN PROJECT APPLICATION

Building History (if available)

The north half of the Broadway storefront has been commercial space since it's construction, separated into two spaces when built and later combined into one commercial space in a 1938 remodel where the storefront was redesigned in an art moderne style. The storefront was remodeled again in 1975, replacing the black vitrolite with stucco and adding a mansard roof. The 1975 was later reversed, restoring the storefront to its 1938 vintage as it exists today. See attached National Register of Historic Places forms for further information on the rest of the building.

Total Cost of façade renovation	$ 100,000 (estimated)	**Amount of CDBG Funding Requested**	$ 15,000

Is the exterior renovation part of a larger project?

☐ Yes ■ No, the exterior rehab is the only work I am doing

If yes, please describe comprehensive project.

Summary of Existing Condition of Exterior (please attach pictures – Attachment 1)

The glass panels adhered to the façade of the 402 storefront are damaged in numerous locations – maintenance of these fragile panels is difficult with consideration of their availability and cost.

STOREFRONT REHAB & DOWNTOWN PROJECT APPLICATION

Summary of Proposed Scope of Work (materials, color schemes, etc.) Please attach colorized drawings that include pre- and post-rehab detail, indicating specifically what will be modified and how (Attachment 2). *Note – to receive historic preservation approval, projects **cannot** submit plans that include the use of "anodized" aluminum. If window replacement is proposed, applicant must provide manufacturer's window specifications.*

The storefront will be constructed of painted aluminum framing, with a center-glazed 2" x 4-1/2" profile, taking cues from the narrow framing profiles of the historic storefront. High performance glazing, Solarban 70XL, will be utilized for its balance of energy performance and transparency. The narrow double door at the front will replaced with a new single door to meet ADA clearance requirements. A dark granite base is being incorporated at the sidewalk level for durability and is in proportion to original raised base of the storefront, though without window openings to the basement.

The aluminum framing and panning will be a painted finish to match the medium bronze of the window framing at the 400 storefront. The center pilaster, presumed to be a poured concrete column, will be clad with a steel skin, mimicking the cast iron pilasters flanking the 400 storefront entry.

The original brick and pilasters at each end of the storefront will be exposed and the condition assessed to determine whether restoration is possible or replacement with matching materials will be required. The cornice directly above the 402 storefront, removed in the 1938 remodel, will be replaced with a custom cast stone piece matching the color and profile of the original cornice.

How will proposed project affect the historic character of the property?

The storefront rehabilitation seeks to restore the 402 storefront to align with the character of the original 1914 construction while improving ease of maintenance and street visibility.

How will your project complement downtown redevelopment efforts?

The project will renew this commercial space in an area of downtown that continues to see revitalization of adjacent properties to the north – Unglued, Insomnia Cookies, and soon, the Drunken Noodle. The new storefront will increase the viability of this commercial space for a long-term commercial tenant by increasing visibility and natural light penetration into the space.

For more information on completing this application, please refer to the following website: www.FargoND.gov/storefrontdowntowngrants.

ATTACHMENT 1: PHOTOS

(current and historic, if available)

402 BROADWAY STOREFRONT
FARGO, ND

Hotel

POWERS

and Coffee Shop

FARGO, N. DAKOTA

SHULTZ+ASSOCIATES
ARCHITECTS

402 BROADWAY STOREFRONT
A3: Historic Image
August 7, 2018

SHULTZ+ASSOCIATES
ARCHITECTS

402 BROADWAY STOREFRONT
A4: Historic Image
August 7, 2018

SHULTZ+ASSOCIATES
ARCHITECTS

402 BROADWAY STOREFRONT
A5: Current Image
August 7, 2018

ATTACHMENT 2: DRAWINGS PRE & POST

EXISTING BUILDING ELEVATION

Scale: 1/8" = 1'-0"

SHULTZ+ASSOCIATES ARCHITECTS

402 BROADWAY STOREFRONT

A6: Existing Building Elevation

1/8" = 1'-0" August 7, 2018

PROPOSED BUILDING ELEVATION

Scale: 1/8" = 1'-0"

SHULTZ+ASSOCIATES ARCHITECTS

402 BROADWAY STOREFRONT

A7: Proposed Building Elevation

1/8" = 1'-0" August 7, 2018

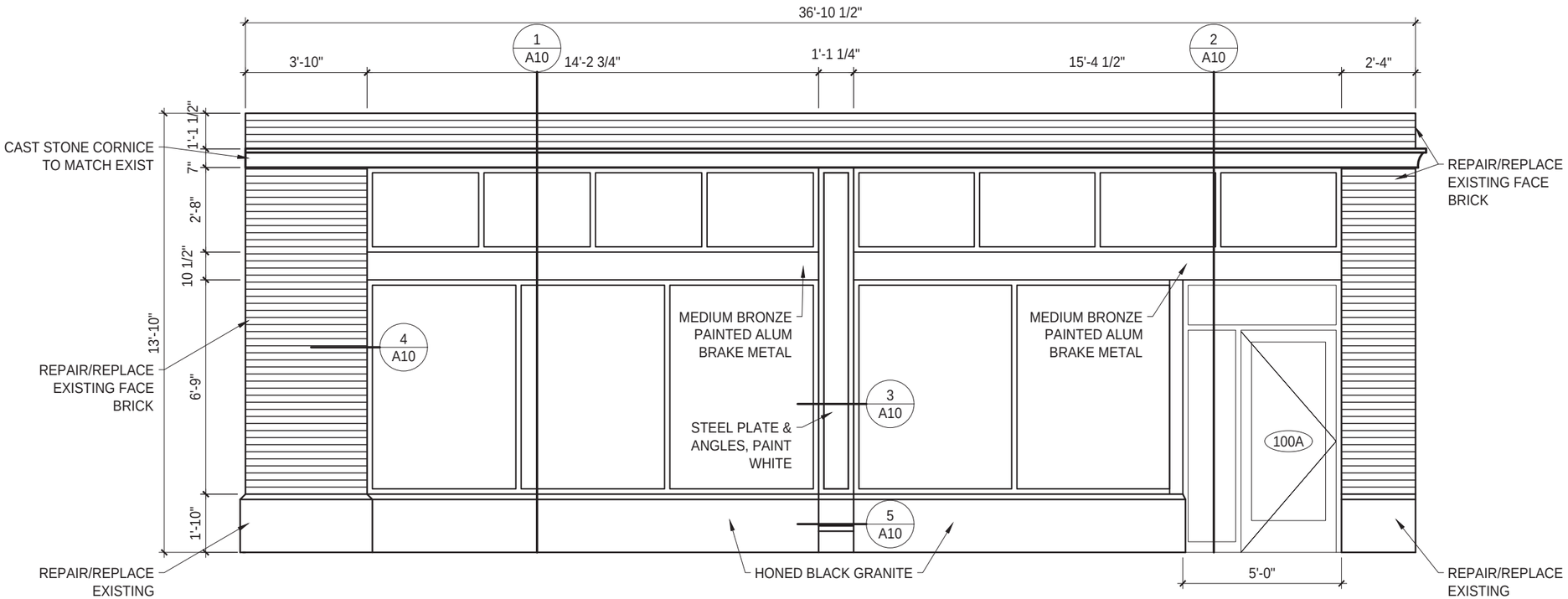

STOREFRONT ELEVATION

Scale: 1/4" = 1'-0"

SHULTZ+ASSOCIATES
ARCHITECTS

402 BROADWAY STOREFRONT

A8: Storefront Elevation

1/4" = 1'-0" August 7, 2018

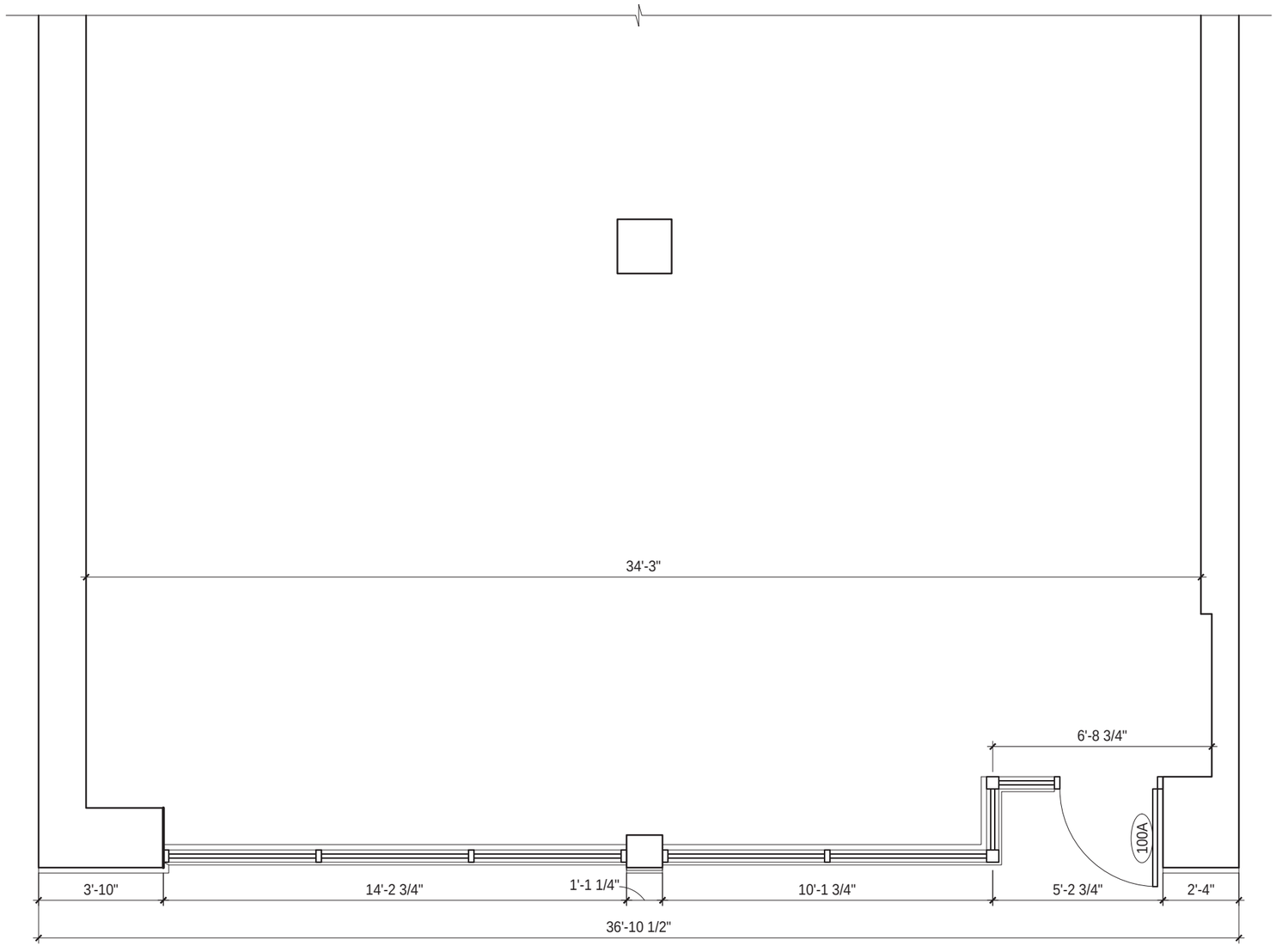

PROPOSED FLOOR PLAN

Scale: 1/4" = 1'-0"

SHULTZ+ASSOCIATES ARCHITECTS

402 BROADWAY STOREFRONT

A9: Existing Floor Plan

1/4" = 1'-0" August 7, 2018

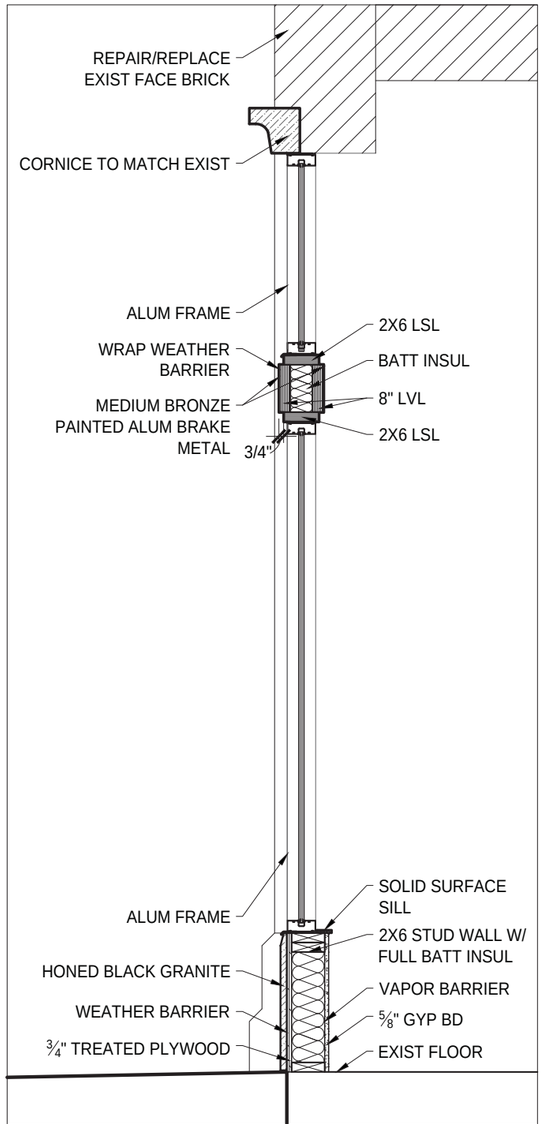

1 STOREFRONT DETAIL

Scale: 1/2" = 1'-0"

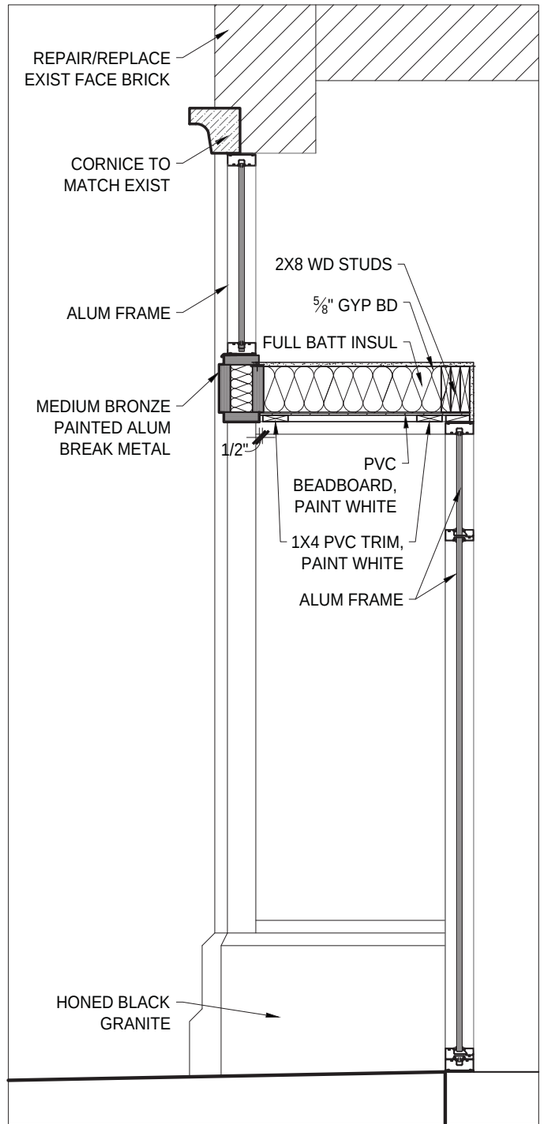

2 STOREFRONT DETAIL

Scale: 1/2" = 1'-0"

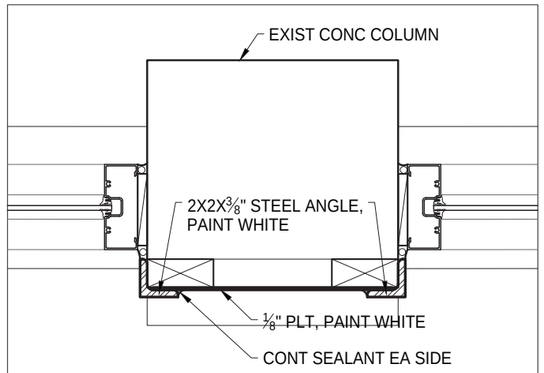

3 COLUMN DETAIL

Scale: 1 1/2" = 1'-0"

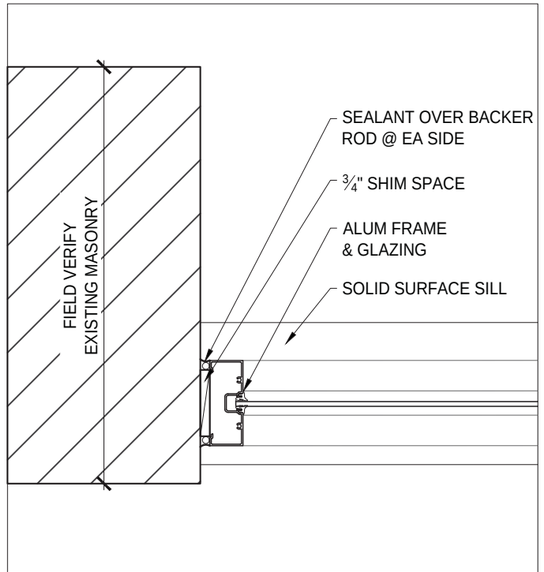

4 ALUM WINDOW DETAIL

Scale: 1 1/2" = 1'-0"

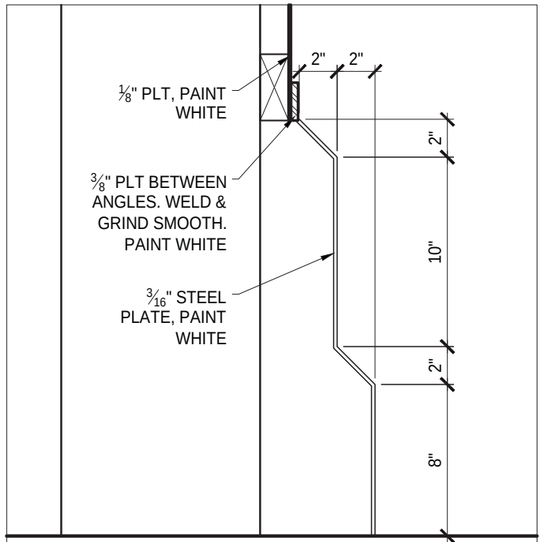

5 COLUMN BASE DETAIL

Scale: 1 1/2" = 1'-0"

SHULTZ+ASSOCIATES ARCHITECTS

402 BROADWAY STOREFRONT

A10: Details

August 7, 2018

SHULTZ+ASSOCIATES
ARCHITECTS

402 BROADWAY STOREFRONT
A11: Corner View
August 7, 2018

SHULTZ+ASSOCIATES
ARCHITECTS

402 BROADWAY STOREFRONT
A12: Facade View
August 7, 2018

SHULTZ+ASSOCIATES
ARCHITECTS

402 BROADWAY STOREFRONT
A13: Storefront View
August 7, 2018

ATTACHMENT 3: ADDITIONAL INFORMATION

THE 400
400 BROADWAY
FARGO, ND 58102

UNIT #	TENANT NAME	SUB
201	QUAM, CASEY	HUD
202	HELLING, MILO A.	HUD
203	CHRISTIANSON, DALE C.	HUD
204	STEUCK, DAMON E.	HUD
205	BIXBY, THOMAS S.	HUD
206	SWEENEY, DIXIE,& DANIEL PINERIO	HUD
207	EDGETON, BRUCE W.	HUD
208	SMITH, SABRINA L.	HUD
209	GRENDAHL, STEPHAN	HUD
210	AHO, JENNIFER L.	HUD
211	NELSON, ROIDNEY A.	HUD
301	PETERSON, JAMES	HUD
302	CANTORE, JOHN R.	HUD
303	KAPLAN, LORA LEE	HUD
304	ALVARADO, JOSEFINA M.	HUD
305	INGALLS, SCOTT E.	HUD
306	FOX, ROCHELLE	HUD
307	TANGEN, COLBY A.	HUD
308	GRAEFF, RICHARD W.	HUD
309	NUR, SADIA	HUD
310	BELGARDE, PATRICE J.	HUD
311	KERLIN, KATHLEEN M.	HUD
312	ONWAN, ALEXANDER	HUD
401	SUNBY, EDWARD	HUD
402	ARTZ, GAIL M.	HUD
403	HINKLEY, JAMES N.	HUD
404	AANENSON, DAVID J.	HUD
405	CLARK, MARSHALL	HUD
406	BRUSE, TERRY G.	HUD
407	MASHEK, DELL RAE	HUD
408	ZIMMERMAN, PAULA J.	HUD
409	*HILL, RODNEY----7/25/18 MI*	HUD
501	BOLINE, MARK A.	HUD
502	QUINN, JOHN A.	HUD
503	HILTON, TINA	HUD
504	HENRY, HARRY G.	HUD
505	BRADLY, MALINDA	HUD
506	BEILKE, STEVEN E.	HUD
507	DRAGER, MARILYN	HUD
508	VARIANNO, KERBY J.	HUD
509	ORVEDAHL, BRUCE	HUD
#####	RESTAURANT---CURRENTLY VACANT	N/A

State Historical Society
of North Dakota (State Historical Board)
North Dakota Heritage Center, Bismarck, N.D. 58505
Telephone 701-224-2666

May 27, 1983

Mr. Paul Feder
The 400 Associates
1700 S. 8th Street
Fargo, ND 58103

Dear Mr. Feder:

We are pleased to inform you that the Powers Hotel, Fargo, North Dakota, has been officially entered in the National Register of Historic Places, in recognition of its contribution to the cultural heritage of North Dakota.

We congratulate you and the other members of your community for the role that you have played in promoting historic preservation in North Dakota, and we want to especially thank you for the assistance that you gave during the nomination process. We hope you will feel free to call on us whenever we can be of any assistance to you.

Sincerely,

James E. Sperry
State Historic Preservation Officer
(North Dakota)

JES/je

NPS Form 10-900
(3-82)

OMB No. 1024-0018
Exp. 10-31-84

United States Department of the Interior
National Park Service

National Register of Historic Places Inventory—Nomination Form

For NPS use only
received APR - 7 1983
date entered

See instructions in *How to Complete National Register Forms*
Type all entries—complete applicable sections

1. Name

historic Powers Hotel (Preferred)

and/or common The 400

2. Location

street & number 400 Broadway ___ not for publication

city, town Fargo ___ vicinity of

state North Dakota code 38 county Cass code 017

3. Classification

Category	Ownership	Status	Present Use	
___ district	___ public	___ occupied	___ agriculture	___ museum
X building(s)	X private	___ unoccupied	___ commercial	___ park
___ structure	___ both	X work in progress	___ educational	___ private residence
___ site	**Public Acquisition**	**Accessible**	___ entertainment	___ religious
___ object	N/A in process	X yes: restricted	___ government	___ scientific
	___ being considered	___ yes: unrestricted	___ industrial	___ transportation
		___ no	___ military	X other: vacant

4. Owner of Property

name The 400 Associates

street & number 1700 S. 8th St.

city, town Fargo ___ vicinity of state North Dakota

5. Location of Legal Description

courthouse, registry of deeds, etc. Cass County Courthouse

street & number 211 S. 9th St.

city, town Fargo state North Dakota

6. Representation in Existing Surveys

title ___ has this property been determined eligible? X yes ___ no

date ___ federal X state ___ county ___ local

depository for survey records State Historical Society of North Dakota

city, town Bismarck state North Dakota

7. Description

Condition		Check one	Check one
___ excellent	___ deteriorated	___ unaltered	_X_ original site
_X_ good	___ ruins	_X_ altered	___ moved date _____
___ fair	___ unexposed		

Describe the present and original (if known) physical appearance

The east facade of the Powers Hotel is a symmetrical, balanced composition rendered in cream white terra cotta, white stone, and hard red face brick. It is broken horizontally by belt and trim courses at the first floor and between the third and fourth floors. Originally the building was three stories with a brick and stone parapet. This parapet was removed in the 1919 addition of two floors by Fargo architect William F. Kurke. The windows are symmetrically arranged and are composed as one-over-one panes. Windows on the edges of the facade are trimmed with terra cotta toothed into the brick on the top two floors, and stone toothed into the brick on the second and third floors. The entry is unaltered and is covered by a large metal canopy which carries the name "Powers Hotel." Above the front doors, as above all first floor windows, are stained and beveled glass transoms set in a simple vertical pattern of a geometrically stylized plant form, which was a popular ornamental theme of Sullivanesque designers. Large square single pane windows flank the hotel entry and have a transom panel of the leaded glass pattern as occurs over the hotel entry.

The north half of the first floor on the east facade was divided into two commercial areas. In 1938 the space was remodeled from two shops into one coffee shop. This coffee shop was designed in the art moderne style and was good example of the style's emphasis on the surface, reflective claddings, continuity of line, and simplicity of form, emphasizing the curve. The coffee shop remodeling added a large rectangular storefront window terminating in a semicircular end. This curve also occurred in the canopy over the cafe entry. A neon sign advertising the coffee shop was in a continuous reveal which was above and parallel to the window. This art moderne front was damaged when it was remodeled in 1975. The structural pigmented glass was replaced with stucco and a mansard style canopy. The window with its semicircular end remain as well as an untouched interior.

The south facade is much the same as the east. It is approximately one third longer than the east and is not divided into any vertical bays with the exception of the southeast corner which protrudes approximately 8 inches from the remainder of the wall to add some emphasis and verticality to the corner. Materials are the same as the east facade, as are the distinctive terra cotta ornamental "badges" which, along with an increase in parapet height, help accentuate the corners or limits to the facade composition. The ornamental pattern is distinctively a Sullivanesque, organic theme, although its shallow relief and occurrence on a few other structures around the midwest mark this ornament as a stock pattern, perhaps from the American Terra Cotta Company, and was probably not an original composition by Kurke. This ornament, nonetheless, may be the best example of Sullivanesque ornament surviving in Fargo.

Other features of the south facade are the large single pane and double hung windows of the first floor. All have transom lights of leaded glass in the same pattern described on the east facade. A black painted iron and steel fire escape is hung on the eastern half of this facade. It extends from the fifth floor to the first floor and appears to have been added in the 1919 addition of the top two floors by Kurke.

The west and north elevations are quite unlike the south and east in that they are treated as the "back door," which they are for this building. These elevations are constructed of common yellow brick. Although this is a very soft brick no major signs of deterioration are visible.

The west facade is composed only to the extent of aligning vertically most openings. This effort was not carried through to the center, where a stair occurs inside and disrupts window placement. A fire escape on the outside lends an asymmetrical balance to the two story chimney on the north edge. The facade is stepped at the point of the addition of 1919, apparently to avoid placing guest windows too close to the existing chimney. The lower portions of this facade show evidence of the removal of small sheds or additions. At the top is visible a sign painted on the brick which reads "Hotel Powers Fireproof."

The north elevation is for the most part not visible, concealed by an adjacent three story building, also constructed by T. F. Powers at approximately the same time as the Powers Hotel. The visible portion is the two floor addition by Kurke in 1919, and is constructed of soft yellow Fargo common brick. There are few openings, and as such, few elements to compose. A sign painted on the brick which reads "The Powers Hotel" in art moderne letters on the east edge of this facade is visible from Broadway.

The building is rectangular in plan and occupies a lot which has street exposure from Broadway on the east, Fourth Avenue on the south, and Roberts Street on the west. The building is built up to lot lines on the north, east, and south. It occupies roughly two-thirds of its lot and has parking and service access from Roberts Street on the west.

The basement occupies the full building footprint, is rectangular in plan, and is served by two elevators; one passenger elevator in the east core and one for service in the west core. The basement's principle use was as mechanical and storage. A small barber/beauty shop, accessible from the east elevator or stair and from a sidewalk stairwell, occupies the east portion of the basement under the hotel lobby.

The ground floor, rectangular in plan, is divided by a party wall down the center into the hotel lobby on the south and the coffee shop on the north. The hotel lobby was designed as a large single room with coffered plaster ceiling. The stair to the guest rooms winds around the elevator and is the only object in the lobby to touch the ceiling. The desk and office are in the northwest corner of the space and extend only eight feet up, stopping four feet short of the twelve-foot-high-ceiling. A single line of columns extends through the center of the space running east-west. Interior plaster ornamentation is restricted to a simple cove at the ceiling and a shallow relief pattern of blocks as a wainscot. Behind the desk is a large meeting room separated from the lobby by a pair of leaded and beveled glass doors. This room has a door to the kitchen of the adjacent coffee shop. The coffee shop is a large room with three columns down the center running east-west. The major features are high-backed booths, painted in a high gloss enamel, and a continuously curving soffit which extends from facade back to coffee bar and back to facade. The soffit is striped with an indirect blue neon light which is continuous for the soffit length. The coffee bar is centered in the space and is clad in black structural pigmented glass, as are the columns and the wall behind the coffee bar separating eating from food preparation areas.

The second and third floors are similar in their square doughnut shape and arrangement of 28 hotel rooms along a double loaded corridor and looking out into a lightwell or the building perimeter. The rooms were generous in height having nine-and-a-half-foot ceilings, double hung windows, and transoms over room entries which aided natural ventilation. Most rooms had their own baths in the room. These were separate rooms with floor levels six inches above the hotel rooms, presumably to accommodate plumbing. Walls between rooms and corridor walls were pyro bar gypsum block covered with painted plaster.

The fourth and fifth floors were added in 1919 by Kurke, and are similar in their "L" shaped configuration and layout of 22 rooms along a double loaded corridor extending along the east and south portions of the buildings. The rooms look into the lightwell to the north or the perimeter of the building. Rooms on these floors are similar in type, finish and condition to those described in the second and third floors.

The structural frame and floor system for the Powers Hotel is poured in place concrete column and slab. Hollow clay tile blocks are cast in the slab in locations where the more expensive and heavier concrete is not structurally required. This system acts structurally in much the same way a coffered slab does today.

The building is in excellent condition for its age, having a dated mechanical and electrical system. It is a prime property for a sensitive rehabilitation so it may continue to anchor the north Broadway commercial district.

8. Significance

Period	Areas of Significance—Check and justify below				
___ prehistoric	___ archeology-prehistoric	___ community planning	___ landscape architecture	___ religion	
___ 1400–1499	___ archeology-historic	___ conservation	___ law	___ science	
___ 1500–1599	___ agriculture	___ economics	___ literature	___ sculpture	
___ 1600–1699	_X_ architecture	___ education	___ military	___ social/ humanitarian	
___ 1700–1799	___ art	___ engineering	___ music	___ theater	
___ 1800–1899	_X_ commerce	___ exploration/settlement	___ philosophy	___ transportation	
_X_ 1900–	___ communications	___ industry	___ politics/government	___ other (specify)	
		___ invention			

Specific dates 1914, 1919, 1938 **Builder/Architect** Hancock Brothers and William F. Kurke, Architects; T.F. Powers, Builder

Statement of Significance (in one paragraph)

The Powers Hotel is significant for its Sullivanesque architectural style as designed by the Hancock Brothers and William F. Kurke, for its builder, Thomas F. Powers, and for its role in the commercial development of North Broadway in Fargo, North Dakota.

The architectural style of the Powers Hotel can best be described as early Sullivanesque. This is because of its simple massing, absence of classical ornament, simple punched window and door openings, and dynamic organic theme of its parapet ornamentation. The architects for the lower three floors of the Powers Hotel were the Hancock Brothers of Fargo. These men are considered to belong to the small group of architects classed as pioneer architects. The Hancock Brothers are noteworthy not only for their practice in and around Fargo at the turn of the century, but as style setters for the city's architecture. The bulk of Hancock Brothers work is Classical Revival style, which was their mainstay after the Columbian Exposition of 1883. Many examples of this style exist in Fargo today. The Richardsonian Romanesque style was introduced in Fargo by the firm in four projects, of which two remain. The Chicago style, as popularized nationally by William Lebaron Jenny, Holabird and Root, and Louis Sullivan, was introduced to Fargo by the Hancock Brothers in warehouse type projects of which a few survive. But the style which is called Sullivanesque was introduced in only one structure, the Powers Hotel. The bold, simple massing, lack of classical ornament or detail inside or out, and the simple, bold, punched openings of the windows make this the sole existing example of yet another style introduced to the architectural vocabulary of Fargo. William F. Kurke, the architect for the top two floors, recognized this in 1919, and provided a consistent, if not emphatic, addition which has proven to be his only work which can be classified as Sullivanesque or Prairiesque. This is apparent in Kurke's choice for the parapet design, architectural terra cotta, but which was not as rich or imaginative as the work of Sullivan. This apparently "stock" terra cotta was designed to fit in the composition with the ornament, breaking the otherwise clean profile of the parapet.

The builder of the Powers Hotel was Thomas F. Powers, who leased it to his brother Joseph and managed it until 1925, when he moved to the Waldorf Hotel. The Powers family managed the hotel with their sons until 1981, when it was purchased by The 400 Associates Partnership for rehabilitation into elderly housing. T. F. Powers had a financial interest in the Fargoan Hotel, and his sons have always been prominent in the hotel management field in Fargo, managing the Gardner, Powers, Fargoan, and Waldorf Hotels.

Powers acted as a foreman for another contractor before forming his own construction company in 1904. His construction company constructed many city institutions, schools, buildings at North Dakota State Agricultural College, and local hospitals prior to constructing the Powers Hotel. He constructed the Fargoan Hotel. It is of interest to note that after constructing the Fargoan Hotel he built the city's only fireproof hotel for himself.

9. Major Bibliographical References

A Century Together: A History of Fargo, North Dakota and Moorhead, Minnesota. Fargo-Moorhead Centennial Coroporation, June, 1975.
Fargo Forum.
Kurke, William, F., Architectural drawings.
Ramsey, Ronald L. M., Fargo-Moorhead - A Guide to Historic Architecture.

10. Geographical Data

Acreage of nominated property Less than 1 acre.
Quadrangle name Fargo North, N. Dak. Quadrangle scale 1:24000

UTM References

	Zone	Easting	Northing
A	14	668560	5193980
B			
C			
D			
E			
F			
G			
H			

Verbal boundary description and justification
South 70' of Block E Chapin's, Johnson and Barrett's Addition, Fargo, North Dakota.

List all states and counties for properties overlapping state or county boundaries

state	N/A	code	N/A	county	N/A	code	N/A
state	N/A	code	N/A	county	N/A	code	N/A

11. Form Prepared By

name/title Michael J. O'Brien, Architect, Associate
organization Seth Twichell and Associates date 1/24/83
street & number 415 3rd Avenue North telephone (701)237-6825
city or town Fargo state North Dakota

12. State Historic Preservation Officer Certification

The evaluated significance of this property within the state is:

___ national ___ state X local

As the designated State Historic Preservation Officer for the National Historic Preservation Act of 1966 (Public Law 89-665), I hereby nominate this property for inclusion in the National Register and certify that it has been evaluated according to the criteria and procedures set forth by the National Park Service.

State Historic Preservation Officer signature James E. Sperry
title North Dakota State Historic Preservation Officer date 3/11/83

For NPS use only
I hereby certify that this property is included in the National Register
Linda McClelland date 5/18/83
for Keeper of the National Register
Attest: Patrick Andrus date 5/10/83
Chief of Registration

Product Data Sheet

SOLARBAN® 70XL
Solar Control Low-E Glass

Aesthetic Description

Solarban® 70XL glass is a solar control, low-e glass that brilliantly combines the clear appearance of transparent, color-neutral glass with an exceptional combination of solar control and visible light transmittance (VLT).

The world's first triple-silver, magnetic sputter vacuum deposition (MSVD) coating, *Solarban*® 70XL glass expands the design possibilities for buildings in two important ways. First, *Solarban*® 70XL glass enables architects to incorporate vast areas of vision glass into their designs without a corresponding increase in cooling equipment capacity.

Second, architects can specify a clear aesthetic while achieving solar control performance that was once attainable only through the use of tinted glass and a solar control, low-e coating in an insulating glass unit (IGU).

Performance Options

When coupled with conventional clear glass in a one-inch IGU, *Solarban*® 70XL glass achieves a Visible Light Transmittance (VLT of 64 percent and a Solar Heat Gain Coefficient (SHGC) of 0.27 to produce a Light to Solar Gain (LSG) ratio of 2.37, making it one of the industry's highest-performing glasses.

The clear aesthetic of *Solarban*® 70XL glass also makes the product exceptionally versatile, offering architects an extensive array of performance and appearance options. For instance, for projects that require advanced solar control performance, *Solarban*® 70XL glass can be coated on the second (#2) surface of nearly all of Vitro Architectural Glass' (formerly PPG glass) wide range of tinted glasses to produce SHGCs of as low as 0.19 and LSG ratios ranging from 1.68 to 2.15.

For more color and reflectivity choices, *Solarban*® 70XL glass may be specified on the third (#3) surface of an IGU behind a tinted lite or in combination with *Solarcool*® reflective or *Vistacool*® subtly reflective color-enhanced glasses.

Photo courtesy of Wes Thompson

The Cirque

Location: Dallas, TX | Product: *Solarban*® 70XL Glass | Architect of Record: PageSoutherlandPage | Design Architect: Gromatzky Dupree & Associates | Glass Fabricator: Trulite Glass and Aluminum Solutions | Glazing Contractor: Haley-Greer

LEED and Sustainable Building

The center-of-glass insulating performance of *Solarban*® 70XL glass enables most glazing designs to meet the most stringent regional and local energy standards when used as part of a well-designed and constructed glazing system. In addition, *Solarban*® 70XL glass can contribute to achieving credit under LEED v4 (and earlier versions) in the categories of Energy and Atmosphere (EA), Materials and Resources (MR), Indoor Environmental Quality (IEQ) and Innovation in Design (IN) as detailed below.

Category	Feature	Benefit
Energy & Atmosphere (EA)	**SHGC:** 0.19 to 0.27	Helps projects achieve Minimum Energy Performance and ASHRAE 50% Advanced Energy Design Guide (AEDG) energy efficiency targets in LEED v4.
	U-Value: 0.26 (Summer) 0.28 (Winter)	Exceptional solar control performance enables buildings to use less energy and control long-term energy costs.
Materials & Resources (MR)	Regional Sourcing	Can be sourced regionally throughout North America through *Vitro Certified*™ Fabricators.
	Cradle to Cradle Certified™ (Silver Level)	*Cradle to Cradle* Silver certification (Material Ingredient Optimization).
	Published Corporate Sustainability Statement	Manufacturer has published a stated commitment to sustainable practices.
Indoor Environmental Quality (IEQ)	**VLT:** 32% to 64%	Provides ample visible light, connecting occupants to undistorted natural outdoor views.
Innovation in Design (IN)		Helps projects earn *Innovation in Design* credits by contributing to exemplary performance strategies through the selection of environmentally focused products.

Vitro®

Fabrication and Availability

Solarban® 70XL glass is available exclusively through the *Vitro Certified*™ Network. *Vitro Certified*™ Fabricators can meet tight construction deadlines and accelerate the delivery of replacement glass before, during and after construction. *Solarban*® 70XL glass is manufactured using the sputter-coating process and is available for annealed, heat-strengthened and tempered applications.

Additional Resources

Solarban® 70XL glass is *Cradle to Cradle Certified*™. For more information or to obtain samples of any Vitro Glass product, call **1-855-VTRO-GLS (887-6457)** or visit **vitroglazings.com**.

Vitro Architectural Glass is the first U.S. float glass manufacturer to have its products recognized by the *Cradle to Cradle Certified*™ program, and offers more C2C-certified architectural glasses than any other float glass manufacturer.

Insulating Glass Unit Performance Comparisons | 1-inch (25mm) units with 1/2-inch (13mm) airspace and two 1/4-inch (6mm) lites

Glass Type: Outdoor Lite: Coating if Any (Surface) Glass + Indoor Lite: Coating if Any (Surface) Glass	Visible Light Transmittance (VLT)	Visible Light Reflectance		(BTU/hr°ft²°°F) NFRC U-Value		Solar Heat Gain Coefficient (SHGC)	Light to Solar Gain (LSG)
		Exterior %	Interior %	Winter Nighttime	Winter Argon		
***Solarban*® 70XL Solar Control Low-E Glass**							
Solarban® 70XL (2) + Clear	64	12	13	0.28	0.24	0.27	2.37
Solarban® 70XL (2) *Solexia*® + Clear	58	10	13	0.28	0.24	0.27	2.15
Solarban® 70XL (2) *Atlantica*® + Clear	51	9	12	0.28	0.24	0.24	2.13
Solarban® 70XL (2) *Azuria*® + Clear	52	9	12	0.28	0.24	0.25	2.08
Solarban® 70XL (2) *Solarblue*® + Clear	42	8	12	0.28	0.24	0.23	1.83
Solarban® 70XL (2) *Pacifica*® + Clear	32	6	12	0.28	0.24	0.19	1.68
Solarban® 70XL (2) *Solarbronze*® + Clear	40	7	12	0.28	0.24	0.21	1.90
Solarban® 70XL (2) *Optigray*® + Clear	47	8	12	0.28	0.24	0.24	1.96
Solarban® 70XL (2) *Solargray*® + Clear	34	6	12	0.28	0.24	0.20	1.70
Solexia® + *Solarban*® 70XL (3) Clear	56	11	12	0.28	0.24	0.32	1.75
Atlantica® + *Solarban*® 70XL (3) Clear	49	10	11	0.28	0.24	0.28	1.75
Azuria® + *Solarban*® 70XL (3) Clear	49	9	11	0.28	0.24	0.29	1.69
Solarblue® + *Solarban*® 70XL (3) Clear	40	8	11	0.28	0.24	0.27	1.48
Pacifica® + *Solarban*® 70XL (3) Clear	31	6	10	0.28	0.24	0.22	1.41
Solarbronze® + *Solarban*® 70XL (3) Clear	38	8	11	0.28	0.24	0.26	1.46
Optigray® + *Solarban*® 70XL (3) Clear	45	9	11	0.28	0.24	0.29	1.55
Solargray® + *Solarban*® 70XL (3) Clear	32	7	11	0.28	0.24	0.24	1.33
Graylite® II + *Solarban*® 70XL (3) Clear	6	4	10	0.28	0.24	0.11	0.55
Vistacool*® and *Solarcool*® with *Solarban*® 70XL Solar Control Low-E (3)							
Vistacool® (2) *Azuria*® + *Solarban*® 70XL (3)	38	21	23	0.28	0.24	0.24	1.58
Vistacool® (2) *Pacifica*® + *Solarban*® 70XL (3)	24	11	22	0.28	0.24	0.19	1.26
Solarcool® (2) *Solexia*® + *Solarban*® 70XL (3)	22	24	27	0.28	0.24	0.17	1.29
Solarcool® (2) *Azuria*® + *Solarban*® 70XL (3)	19	19	27	0.28	0.24	0.15	1.27
Solarcool®(2) *Solarblue*® + *Solarban*® 70XL (3)	16	14	27	0.28	0.24	0.15	1.07
Solarcool®(2) *Pacifica*® + *Solarban*® 70XL (3)	12	10	27	0.28	0.24	0.13	0.92
Solarcool®(2) *Solarbronze*® + *Solarban*® 70XL (3)	15	14	27	0.28	0.24	0.15	1.00
Solarcool®(2) *Solargray*® + *Solarban*® 70XL (3)	13	11	27	0.28	0.24	0.14	0.93

**Solarban*® 70XL glass for annealed applications is applied to *Starphire*® glass, heat treated applications will require either clear or *Starphire*® glass depending on manufacturing process.

All performance data calculated using LBNL Window 7.3 software, except European U-value, which is calculated using WinDat version 3.0.1 software. For detailed information on the methodologies used to calculate the aesthetic and performance values in this table, please visit vitroglazings.com or request our Architectural Glass Catalog.

For more information about *Solarban*® low-e glass and other *Cradle to Cradle Certified*™ architectural glasses by Vitro Glass, visit **vitroglazings.com**, or call **1-855-VTRO-GLS (887-6457).**

©2017 Vitro Architectural Glass. All rights reserved. *Atlantica*, *Azuria*, *Graylite*, *Optigray*, *Pacifica*, *Solarban*, the *Solarban* logo, *Solarblue*, *Solarbronze*, *Solarcool*, *Solexia*, *Starphire* and *Vistacool* are registered trademarks owned by Vitro. *Vitro Certified* and the *Vitro Certified* logo are trademarks owned by Vitro. *Cradle to Cradle Certified* is a trademark licensed by the Cradle to Cradle Products Innovation Institute.
Printed in the USA 02/06/17 (7097)

14.01
14000 Series Flush Glaze
Description

Description

Tubelite T14000 Series Framing is a 2" x 4 1/2" deep flush glazed storefront system for use on first floor applications. This dry glazed internally drained framing can be glazed with 1" insulated glass or panels positioned in the center of the frame. Glass pocket reducers can be used to glaze infill thicknesses of 1/4" to 1/2"

A poured and de-bridged thermal break provides industry standard Condensation Resistance and limits thermal conduction. The thermal pocket also employs the Azon Lance for prevention of dry shrink of the polyurethane barrier.

14.02
14000 Series Flush Glaze
Guide Specifications

General

Description

Furnish all necessary materials, labor and equipment for the complete installation of aluminum framing as shown on the drawings and specified herein.

Fixed window framing shall be 14000 Series Flush Glaze (2" x 4 1/2") as manufactured by Tube-lite Inc., Walker, Michigan. Whenever substitute products are to be considered, supporting technical literature, samples drawings and performance data must be submitted ten (10) days prior to bid in order to make a valid comparison of the products involved.

Test reports certified by an independent laboratory must be made available upon request.

Performance Requirements

Air infiltration shall not exceed .06 CFM/Ft^2 when tested in accordance with ASTM E-283 at a test pressure of 6.24 PSF.

There shall be no uncontrolled water entry when tested in accordance with ASTM E-331 "Water Penetration of Exterior Windows, Curtainwalls and Doors by Uniform Static Air Pressure Difference" at a test pressure of 15 PSF.

There shall be no uncontrolled water entry when tested in accordance with AAMA 501.1-94 at a dynamic pressure equivalent of 15 PSF.

Structural performance per ASTM E330 shall be based on a maximum allowable deflection of L/175 of the span or 3/4" maximum. The system shall perform to those criteria under a wind load of (architect specify) _____ PSF.

There shall be no buckling, stress on glass, edge seal failure, excess stress on curtainwall structure, anchors and fasteners or reduction in performance when tested in accordance with AAMA 501.5-98 at a temperature range of 0^0 to 180^0 F.

There shall be no "Life/Safety" type failures (glass breakage, anchor failures, or structural damage) when tested in accordance with AAMA 501.4, seismic test (lateral cycling.)

Thermal transmittance due to conduction (U_c) shall be 0.40 - poured & debridged (see AAMA 507-12 test report B6911.03-116-45) BTU/Hr/Ft^2/F degrees. Condensation Resistance Factor (CRF) shall not be less than 54 - poured & debridged only (or 53 - slotted only) when tested in accordance with AAMA 1503-98.

The system shall have a Sound Transmission Class (STC) rating of 32 and an Outdoor-Indoor Transmission Class (OITC) rating of 26 when tested in accordance with ASTM E90-97, ASTM E413-87 (reapproved 1994) and ASTM E1332-90.

Products

Materials

Extrusions shall be of aluminum alloy 6063-T5 extruded within commercial tolerance and free from defects impairing strength and/or durability. Main framing sections to be of .075 inch minimum wall thickness and glazing stop moldings of .060 inch thickness.

Screws, bolts and all other accessories to be compatible with the aluminum under normal service conditions.

Glazing shall be by means of an exterior and interior roll-in wedge of high quality extruded elastomeric material.

Optional: Thermal barrier shall be a two part chemically curing, unfilled polyurethane casting resin poured in place for perimeter members. Intermediate vertical members shall be slotted for efficient thermal performance.

Finish

All exposed framing surfaces shall be free of scratches and other serious blemishes.

Finish to be: (architect select)

- Etched and clear anodized
  - (AAM12C22A31)
    - Clear - Class 2 (C2)
  - (AAM12C22A41)
    - Clear - Class 1 (C1)
- Electrolytically deposited color
  - (AAM12C22A44) Class 1
    - Champagne (CH)
    - Medium Bronze (MB)
    - Dark Bronze (DB)
    - Extra Dark Bronze (EB)
    - Black (BL)
- Fluoropolymer (70%) painted color _____.

Execution

Installation

Shall be in accordance with the manufacturer's installation instructions and the approved shop drawings.

Note:

In keeping with Tubelite's policy of continuing product improvements, all specifications are subject to change without written notice by the manufacturer.

14.05
T14000 Series Flush Glaze
Elevation & 1/4 Size Details

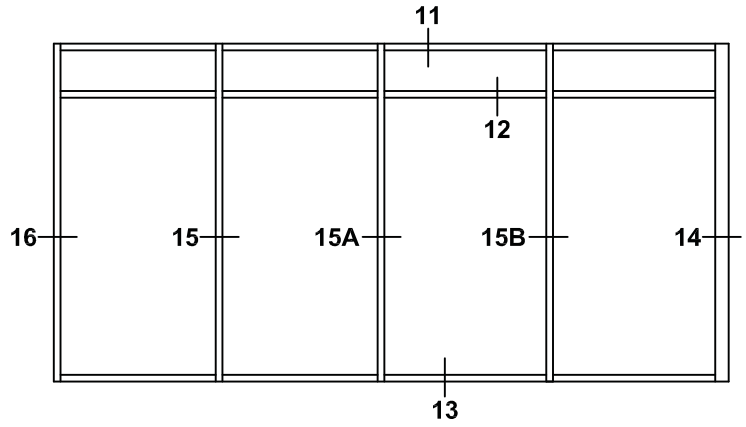

CAD DETAIL FILE NO.
180ELEVB

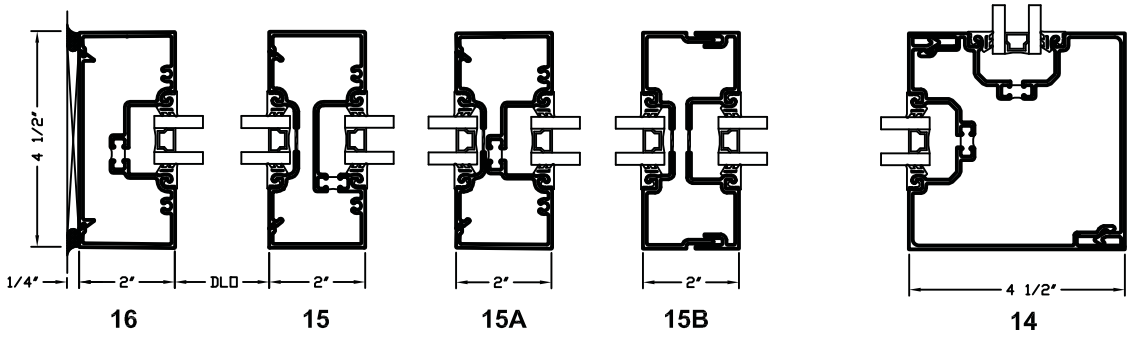

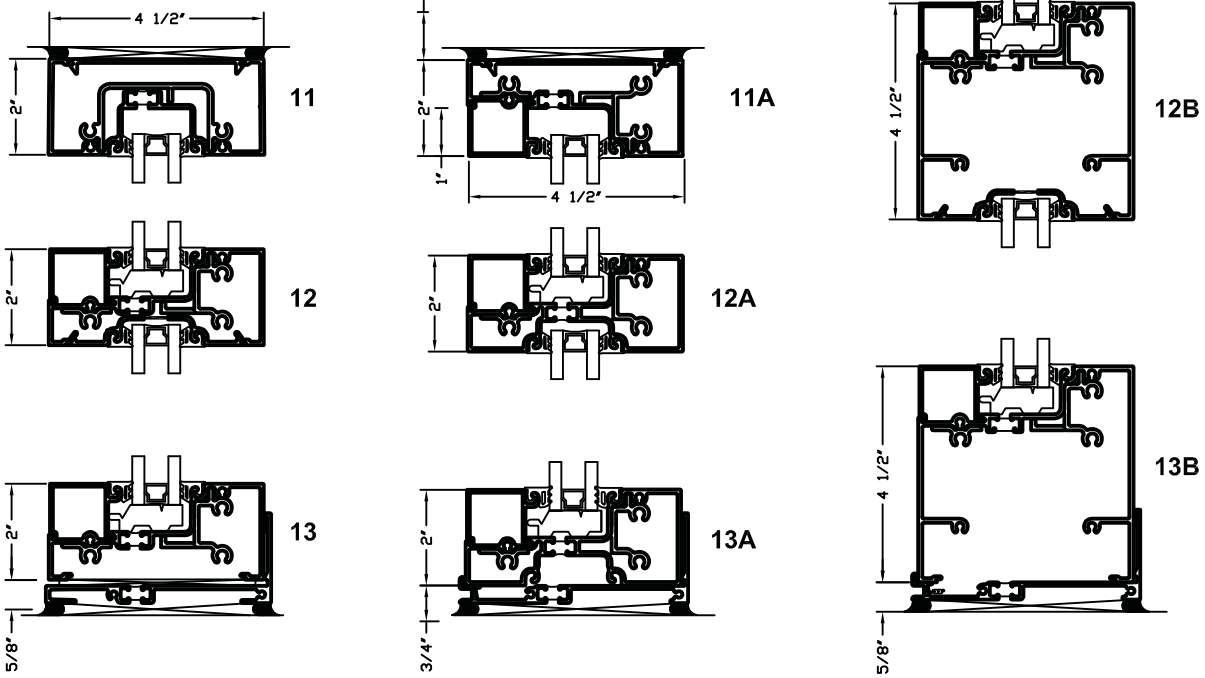

*SEALANT, ROD, & ANCHORS NOT BY TUBELITE

TUBELITE®
DEPENDABLE
LEADERS IN ECO-EFFICIENT STOREFRONT, CURTAINWALL AND ENTRANCE SYSTEMS
2013

14.38A
T14000 Series Flush Glaze
Inside Glazed Head and Intermediate Vertical

* 1/2" WHEN USING E-14259 FLASHING

* 1/4" WHEN USING E-45159 FLASHING

CAD DETAIL FILE NO.
180IGHD

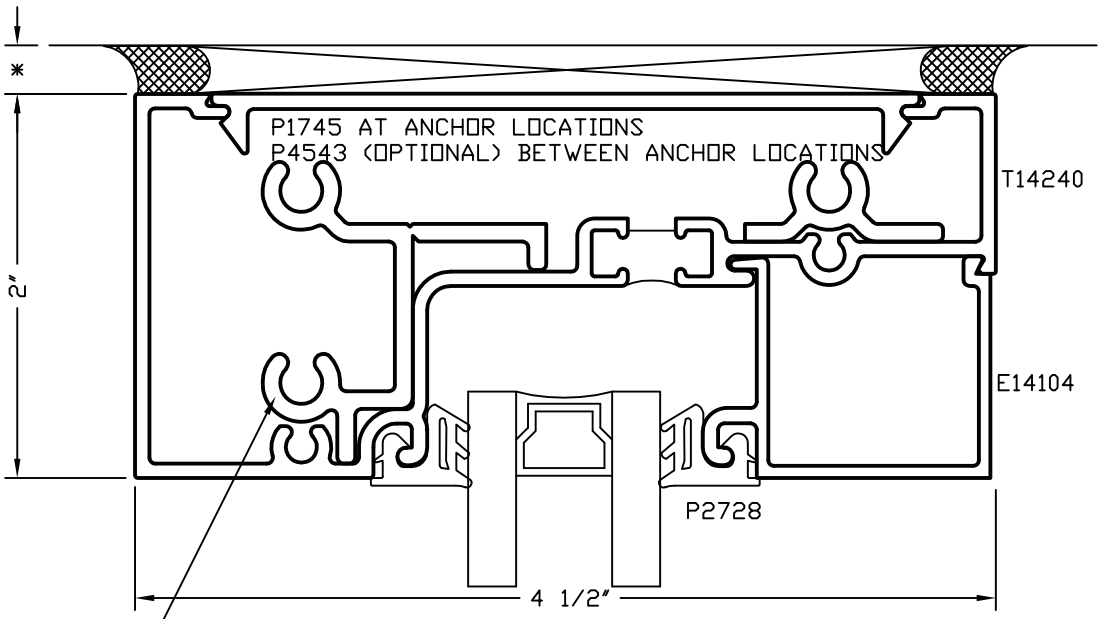

P1134
MODIFIED
S009 (3)
S191 (2)
REQUIRED AT CLIP
JOINT ONLY

CAD DETAIL FILE NO.
180IGHZ

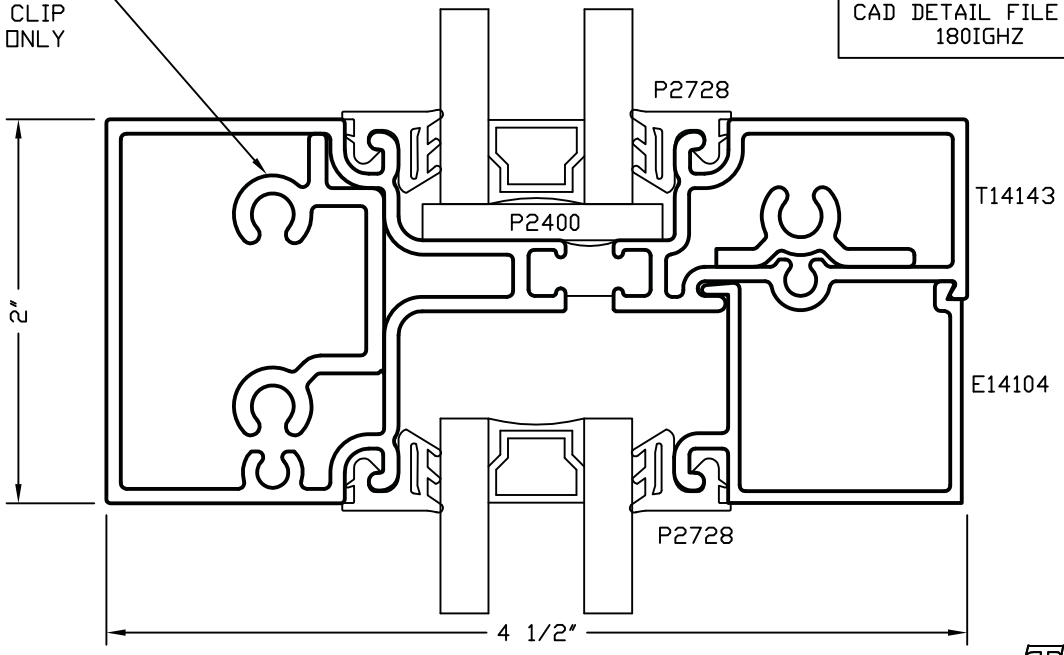

*SEALANT, ROD, & ANCHORS NOT BY TUBELITE

TUBELITE
DEPENDABLE
LEADERS IN ECO-EFFICIENT STOREFRONT, CURTAINWALL AND ENTRANCE SYSTEMS
2013

14.43a
T14000 Series Flush Glaze
Sill with Sidelight Base Adapter

CAD DETAIL FILE NO.
180SILL12

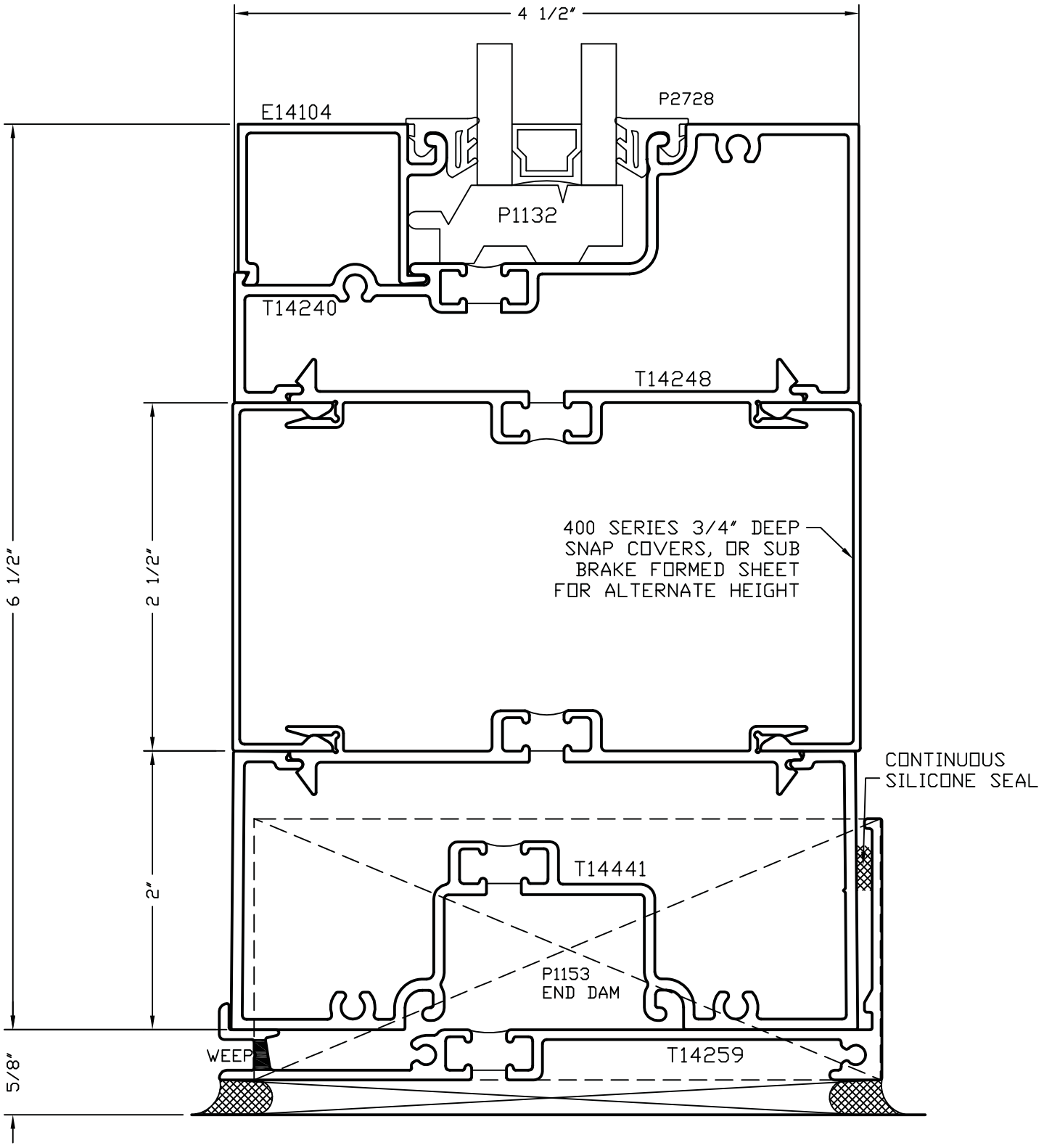

TUBELITE®
DEPENDABLE
LEADERS IN ECO-EFFICIENT STOREFRONT, CURTAINWALL AND ENTRANCE SYSTEMS
2014

*SEALANT, ROD, & ANCHORS NOT BY TUBELITE

14.44
T14000 Series Flush Glaze
Jamb

CAD DETAIL FILE NO.
180JAMB3

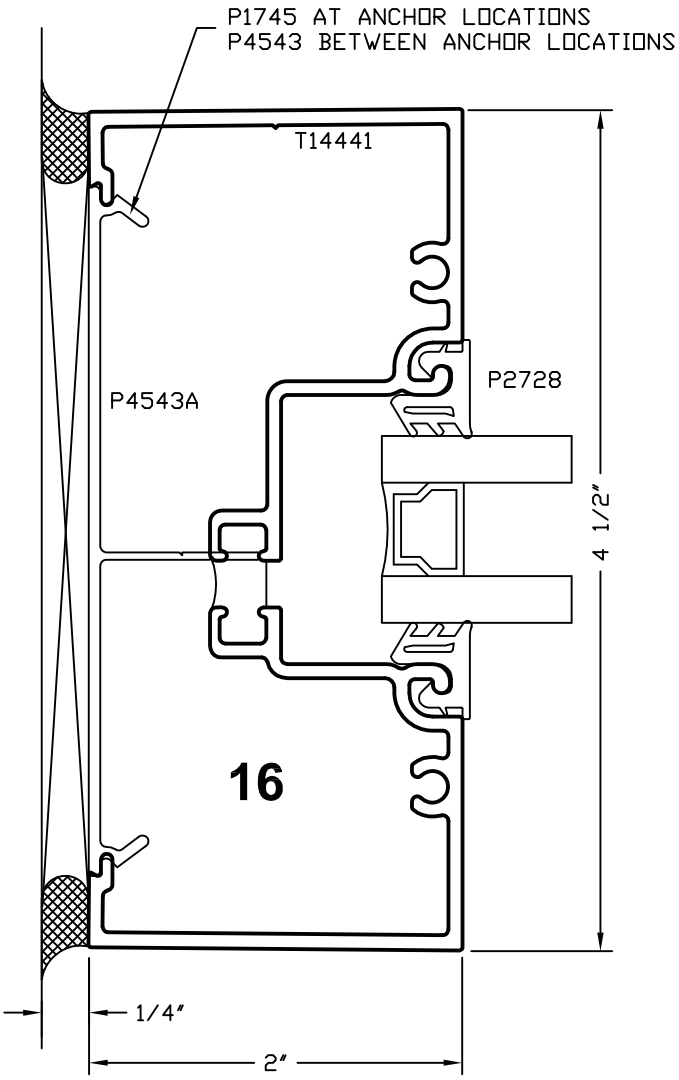

TUBELITE®
DEPENDABLE
LEADERS IN ECO-EFFICIENT STOREFRONT, CURTAINWALL AND ENTRANCE SYSTEMS
2013

*SEALANT, ROD, & ANCHORS NOT BY TUBELITE

14.46
T14000 Series Flush Glaze
Intermediate Verticals For Clip Joinery

CAD DETAIL FILE NO.
180HVRT2

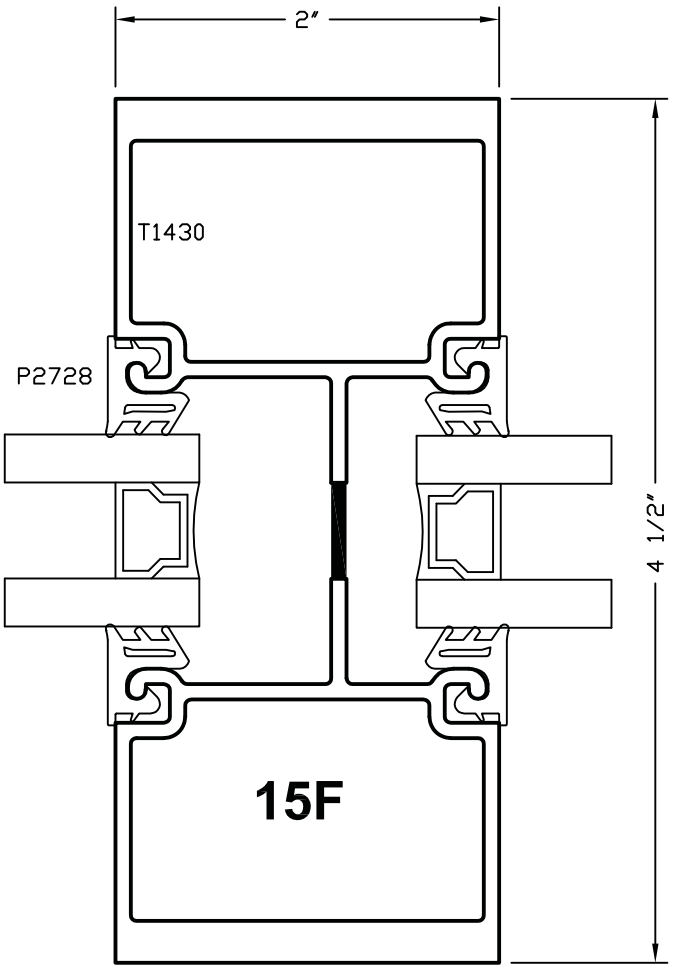

CAD DETAIL FILE NO.
180VERT2

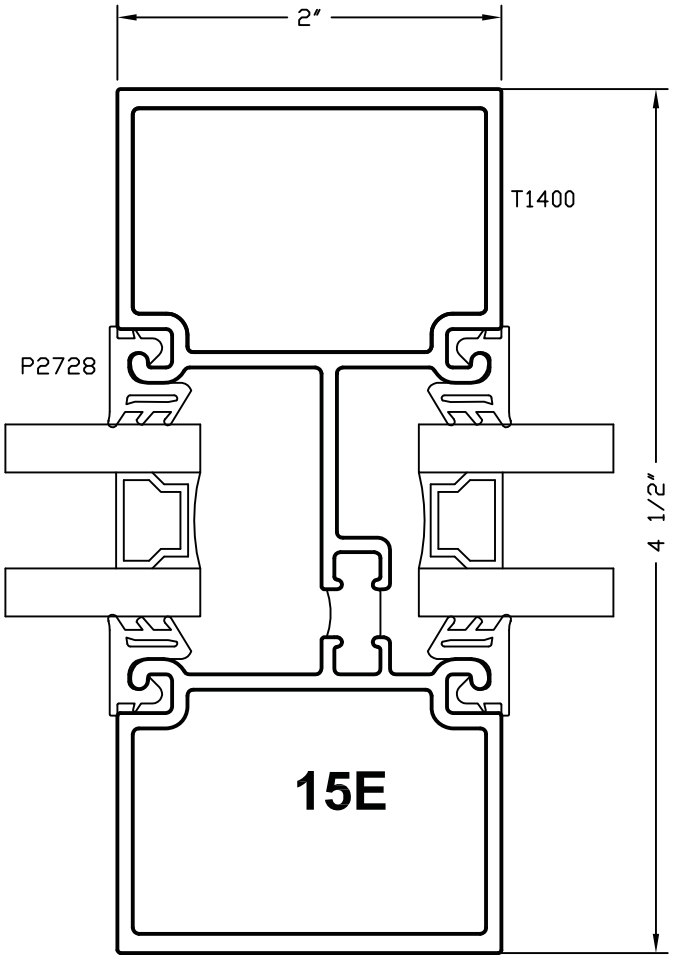

TUBELITE®
DEPENDABLE
LEADERS IN ECO-EFFICIENT STOREFRONT, CURTAINWALL AND ENTRANCE SYSTEMS
2013

*SEALANT, ROD, & ANCHORS NOT BY TUBELITE

T14000 Series Flush Glaze

4 1/2" x 4 1/2" Alternate 90° Corner

CAD DETAIL FILE NO.
180CORN6

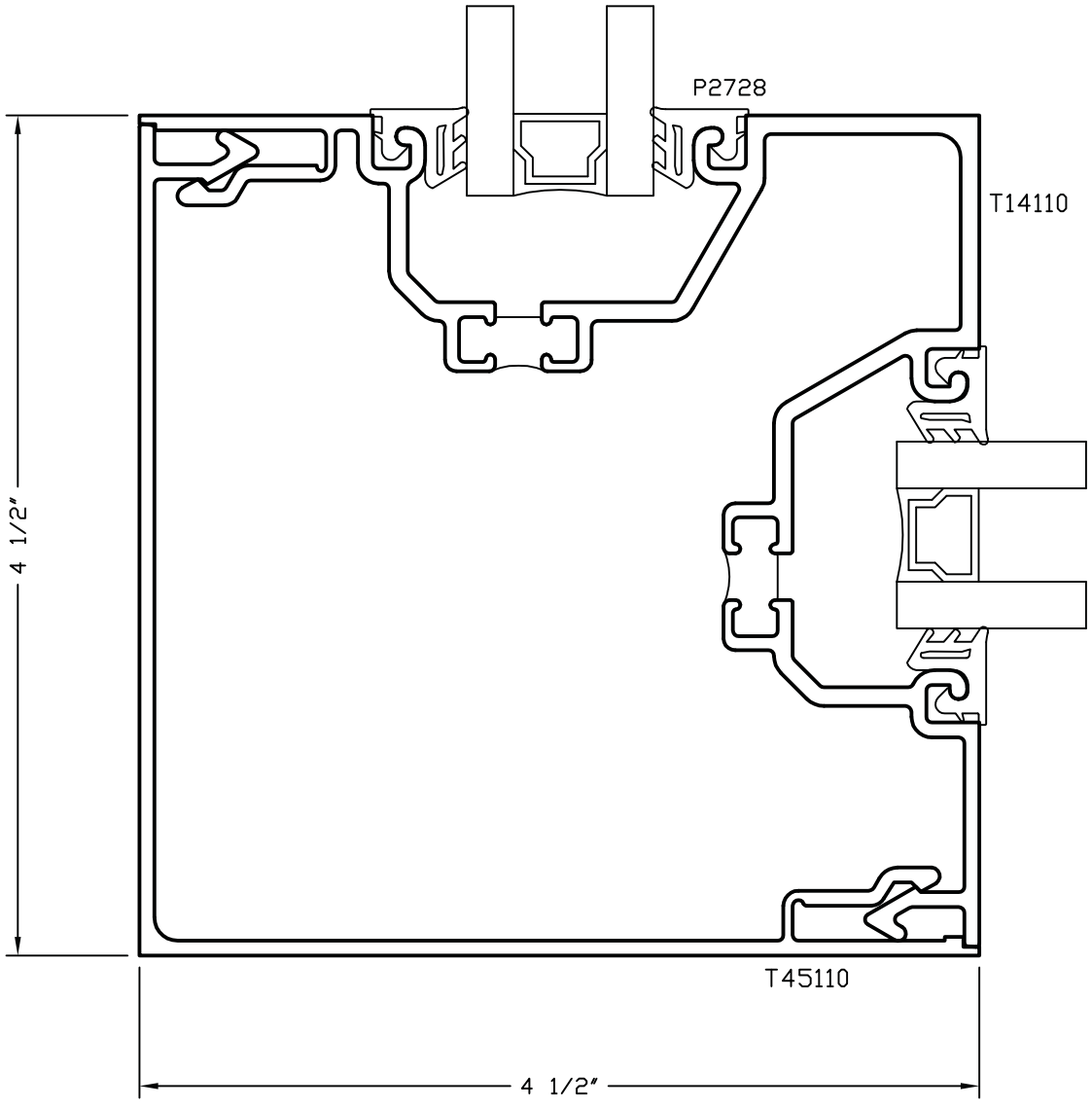

TUBELITE
DEPENDABLE
LEADERS IN ECO-EFFICIENT STOREFRONT, CURTAINWALL AND ENTRANCE SYSTEMS
2013

*SEALANT, ROD, & ANCHORS NOT BY TUBELITE

CITY OF Fargo

PLANNING AND DEVELOPMENT
200 Third Street North
Fargo, North Dakota 58102
Phone: (701) 241-1474
Fax: (701) 241-1526
E-Mail: planning@cityoffargo.com
www.cityoffargo.com

MEMORANDUM

TO: COMMUNITY DEVELOPMENT COMMITTEE

FROM: TIA BRASETH, COMMUNITY DEVELOPMENT COORDINATOR
KRISTI SYLSKAR, COMMUNITY DEVELOPMENT SENIOR PLANNER

DATE: AUGUST 14, 2018

RE: 2017 ANNUAL REPORT TO HUD FOR CDBG & HOME GRANTS

This memo highlights progress that has been made in the implementation of Fargo's Consolidated Plan for Housing and Community Development. It covers the time period of May 1, 2017 to April 30, 2018. During that time, the City received a CDBG award of $637,010, a decrease of $41,219 from the prior year. Fargo received a HOME award in the amount of $336,586, a decrease of $19,736 from the prior year. Community Development programs realized $160,294.80 in program income revenue: $149,515.70 from the City's HOME Participating Jurisdiction (PJ) program; $3,244.50 from the HOME Department of Community Services (DCS) program; and $7,534.60 from CDBG activities.

Fargo's Consolidated Plan outlines policy goals that are the focus of Fargo's community development activities. The following table lists the goals and the amount of CDBG and HOME funds spent in the 2017 program year. Of the total $904,000 in federal funds spent in 2017, 52% went to fund housing activities and 19% to neighborhoods. Efforts focus on affordability, with specific attention to affordable homeownership opportunities and rehabilitation. All of the non-administrative HOME funds went directly to housing activities, funding owner-occupied rehab and special housing projects. Nearly all of the projects identified in Fargo's action plan are complete or well underway.

	CDBG Funds Spent in 2017	*% of CDBG funds drawn*	HOME Funds Spent in 2017	*% of HOME funds drawn*	TOTAL FUNDS SPENT	*% of Total funds drawn*
1. Affordable Housing	$98,068	*19%*	$374,134	*95%*	$472,202	*52%*
2. Homelessness	$70,083	*14%*	$0	*0%*	$70,083	*8%*
3. Neighborhoods	$171,574	*34%*	$0	*0%*	$171,574	*19%*
4. Poverty Reduction	$50,147	*10%*	$0	*0%*	$50,147	*6%*
5. Admin/Fair Housing	$120,720	*23%*	$19,846	*5%*	$140,566	*15%*
Total	$510,592		$393,980		$904,572	

Printed on Recycled paper.

All of the activities undertaken by the City of Fargo in program year 2017 met one of the three HUD National Objectives. 72% of CDBG activity expenditures provided benefit to low and moderate income households and/or areas; 28% was spent on the elimination of slum/blighted conditions. 7% of CDBG expenditures went to public service activities and 19% was spent on Administration-related activities. 100% of non-admin HOME fund expenditures provided benefit to low-income households (80% area median income and below).

The City of Fargo has complied with the grant management requirements associated with the CDBG and HOME programs in 2017 (timeliness, match contribution, and Community Housing Development Organization reserve) and as of the submission date, all projects are progressing according to schedule. The public comment period to review the City of Fargo's Consolidated Annual Performance and Evaluation Report (CAPER) for the 2017 Action Plan for Housing and Community Development is from August 7, 2018 to August 21, 2018. The report is available for comment in the Fargo Planning Department, 2nd Floor at City Hall. Upon approval by the City Commission, the report will be submitted to HUD for final review and approval, as per Federal grant management requirements.

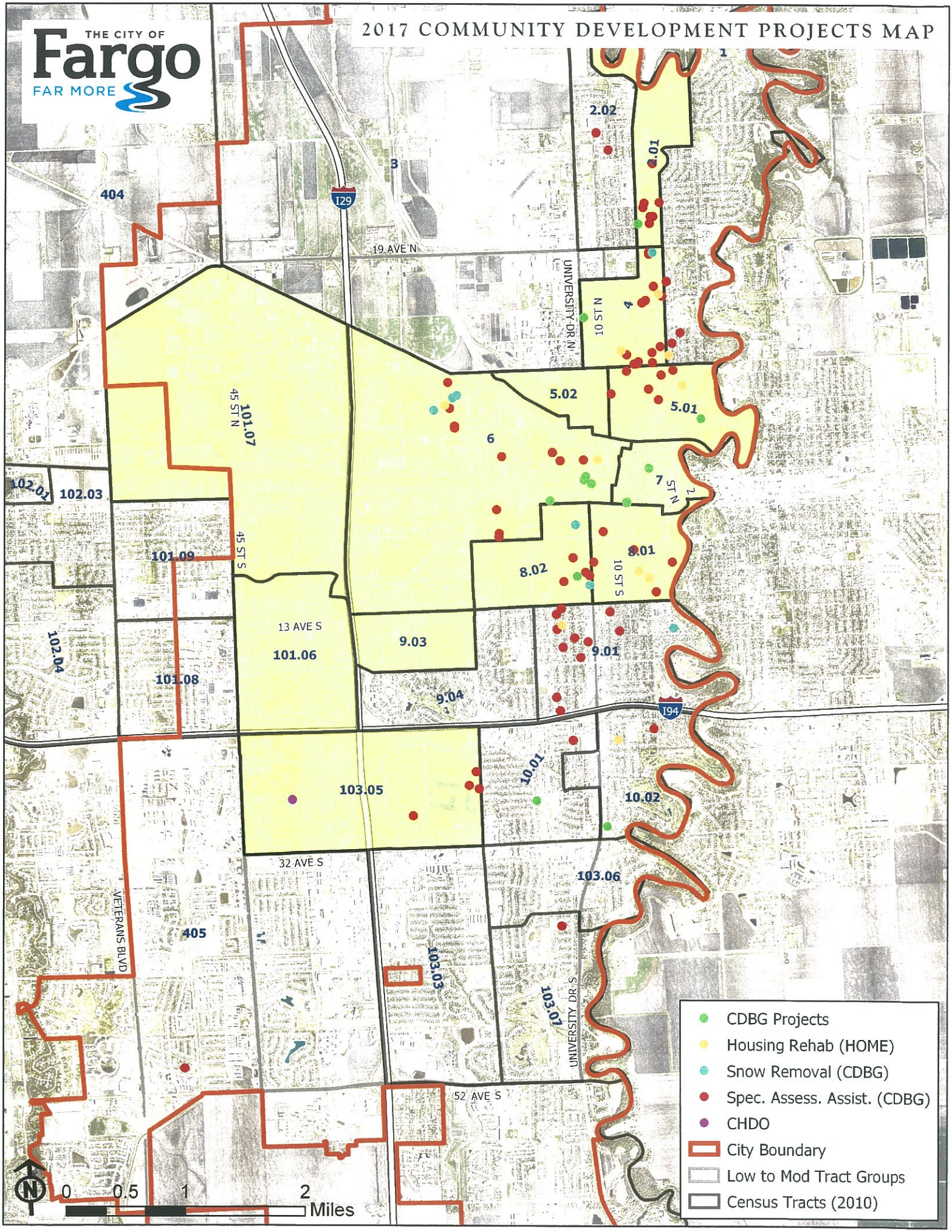
THE CITY OF
Fargo
FAR MORE
2017 COMMUNITY DEVELOPMENT PROJECTS MAP
404
405
I29
I94
19 AVE N
13 AVE S
32 AVE S
52 AVE S
45 ST N
45 ST S
UNIVERSITY DR N
10 ST N
7 ST N
10 ST S
UNIVERSITY DR S
VETERANS BLVD
101.07
101.09
101.06
101.08
102.01
102.03
102.04
103.05
103.06
103.03
103.07
10.01
10.02
9.01
9.03
9.04
8.01
8.02
6
5.01
5.02
4
3
2.02
2.01
1
CDBG Projects
Housing Rehab (HOME)
Snow Removal (CDBG)
Spec. Assess. Assist. (CDBG)
CHDO
City Boundary
Low to Mod Tract Groups
Census Tracts (2010)
0
0.5
1
2
Miles

Winter Overflow Shelter for the region of Fargo, Moorhead, West Fargo & Dilworth Region

2017-18 BRIEF FINDINGS

SUMMARY OF PAST 12 MONTHS IN WINTER OVERFLOW SHELTERING:

In the winter of 2017-18, the Sheltering Churches Project that had provided emergency overflow shelter beds for our local cities had reached its end. A five-year project at its outset, the initiative gifted our region with seven total years of week-to-week emergency sheltering during its final season in 2016-17.

A new solution needed to be found and Churches United for the Homeless staff began seeking alternative sites for emergency overflow in May 2017.

By November 2017, after many discussions, no viable emergency satellite site had been offered. Churches United for the Homeless, Gladys Ray Shelter, New Life Shelter, Dorothy Day Shelter, the YWCA Shelter, Youthworks, and Fraser banded together as a coalition of core local shelters to determine how best to provide emergency care to those who would be caught out in the cold.

Managerial staff at Churches United for the Homeless staff ran point on the overall organizing of emergency sites and logistics for the 2017-18 winter overflow season, with exceptional collaborative help from staff from the other shelters.

FINDINGS

- **Emergency Satellite Sites were hard to find. They also were full every night with at least 35 men and women.** During December 24, 2017, through March 22, 2018, our cities' emergency winter overflow function in 2018 routinely saw 30-40 nightly beds filled at the Satellite Emergency Shelter sites that emerged beyond our core shelters. The shelters also "maxed" out far beyond their regular beds nightly to accommodate men, women, and children who were facing below-zero temperatures with no place to sleep or stay in the daytime hours.

    - **STRESSOR POINT**: With the exception of Our Savior's Lutheran Church, each of the Satellite Sites was only able to be confirmed roughly 24 hours prior to its usage, despite widespread seeking of suitable sites starting in May 2017.
      Emergency Satellite Sites in 2018 included:
        - Moorhead Armory/Minnesota National Guard.
        - Dilworth Community Center
        - Our Savior's Lutheran Church of Moorhead.

- **Faith-based Overflow Shelter Volunteers were hard to recruit. The volunteers who did end up working most frequently in 2018 were from the community at large and came from personal histories of knowing people who had been close to or who had**

suffered from homelessness. Fargo-Moorhead has its distinctive history of having founded and operated the Sheltering Churches program for seven years—which allowed emergency shelter beds to "float" from church to church on a weekly basis, so guests could be cared for by volunteers from the same churches over time. The program was set up as an initiative to aid the local cities while a larger solution to winter overflow could be found.

- **STRESSOR POINTS**: In December 2017 and January 2018, several calls for volunteers were put out to the 1,200+ email list of trained church volunteers who had served Sheltering Churches in the past. Recruiting from this list was slow—especially for volunteers who could stay the overnight shift with overflow guests.
- Central Cities Ministries, who had helped organize Sheltering Churches, concluded its coordination by explaining to Churches United staff that many church volunteers felt that those who had presented at overflow shelter in previous years needed professional social work assistance that was beyond what trained volunteers were able to provide.
- They also made it clear that many of the churches who had participated felt their energy for the project had been expended.

- **Because there was a dearth of overnight volunteers, paid security guard staff had to oversee most nights of Overflow Shelter this past year. This was expensive and some of the guards' temperaments and inability to grasp training mandates made them unsuited to this work.** Because at the Our Savior's site two individuals were needed nightly, one each to supervise the men's and women's overnight dorms, security guards needed to be hired as there were nowhere near enough volunteers. Churches United for the Homeless provided ample training for the guard personnel but for various reasons training principles did not always "take."

  - **STRESSOR POINT**: Churches United received complaints from both its overnight shelter volunteers and from colleagues at other shelters about some of the decision-making guards handed down during some of their shifts. Some of the guards were routinely unable to de-escalate guests appropriately and may have made some guest tensions worse.

POSSIBLE FORWARD DIRECTION for 2018-19:

For the reasons above, we believe it may be wise to discuss:

- Keeping all Overflow Shelter on-site at the various shelters this year.
- Using trained advocates exclusively as the supervisors for overnight shelter.
- Using whatever volunteers can be recruited this next year to assist shelter advocates, during the 8:30 p.m. to 11:00 p.m. and 6:00 a.m. to 8:30 a.m. shifts they worked this past year. Volunteers are useful in tasks including: empathic listening to guests as they wait in line, checking guests in and out of shelter beds, passing out bedding and individually wrapped morning snacks for guests who work and therefore miss breakfast, and cleaning and straightening bedding areas.