Insert Logo and/or company
information here

Sample Art Program

Call for Entries

DEADLINE: Insert Date

In this section provide the details of the call for artist. Please see the sample text below.

“The City of Fargo is seeking visual artists to submit their artwork for possible placement on City-owned infrastructure. The Sample Art Program will give Fargo artists the opportunity to transform ordinary objects of urban infrastructure into something fun and unique, enhancing our public spaces.

Chosen artists will be expected to submit their images in a high resolution (minimum 300dpi) digital format upon request (not at time of application). Selected artists will be paid $ (dollar amount) for the rights to use their image and in promotional materials.

This program is intended to highlight, encourage and promote Fargo artists by giving them the opportunity to present their artwork publicly.”

Selection Process

In this section provide the details of the selection process. Please see the sample text below.

“A selection committee will review all applications and will invite up to 10 artists to provide high resolution images. Selected artists will each receive a licensing fee $ (dollar amount) per image upon completion of an art release/waiver. Location, layout, and length of artwork installation will be determined by the Arts and Culture Commission. The ACC has the right to decline all submissions and retract this call for entries for any reason at any time.”

How to Submit

In this section provide the submission details. Please see the sample text below.

“All application materials must be received via email by 11:59 on [DATE]. Applicants with technical limitations, and for general questions, please contact the Planning Department (planning@fargoND.gov).”

Application Submission

In this section list the materials needed to complete an application submission. Please see sample text below.
A. Cover letter: including Artist's Name, home address (not P.O.box), email address, telephone number.
B. Statement of interest and brief description of the artwork. One page maximum.
C. Image list: including information on title, size, and media of artwork. Minimum 300 dpi.
D. Work samples: up to 5 per artist.

In this section explain how completed materials can be submitted. Please see sample text below.
"Materials can be emailed to xxx@xxx.com. OR share your Dropbox folder. Submit your application materials by uploading files to a folder in Dropbox and then sharing that folder with the Arts and Culture Commission. To do so, use the following steps:
1. Go to www.dropbox.com
2. If you don't have a Dropbox account, create a free account at www.dropbox.com
3. Click on the icon of the folder with a green (+), "New folder," at the top of the screen.
4. Title your new folder with your first initial and last name (if applying as individual) or organization.
5. Once this folder has been created, click on it to open it.
6. Click the icon of the paper with a blue arrow, "Upload," at the top of the screen.
7. Click "Choose a file."
8. Select your folder from your computer.

Guidelines for Art Selection

In this section provide parameters. Please see sample text below.

"The [NAME OF SELECTION COMMITTEE] will select artists based upon the following considerations:
1. The images submitted are high quality, engaging and positive.
2. There are no commercial advertisements, offensive language, etc.
3. The design submitted does not promote or advertise a particular community group or organization.
4. Artists must be over [years] of age.
5. Artists must reside in the City of Fargo
6. Art submitted for consideration should be able to translate well to [object] and not interfere the City's Infrastructure."

Measurements

In this section provide the measurements of the objects or space that will be artistically enhanced. Images or 3-D illustrations of the object and location can be helpful. Please see sample text below.
- If an object will be artistically wrapped provide the dimensions of each side and provide an images that show the placement of hinges, handles, vents, and locks.
- Provide the dimensions of the gallery space for artwork exhibits.
- For sculptures, provide the dimension of the space the object will reside. Will it be placed on an existing platform, along a narrow pathway, etc?

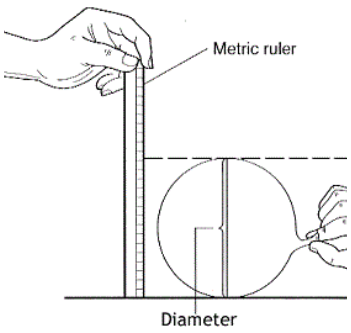

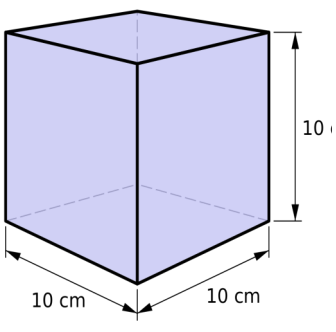

Sample Images

Include images of the object and space where the public art will be placed and be sure to include the physical location (address/ street intersection). The artist can use this information to map out their design and draw inspiration from the surroundings.

ONLY FILL OUT AND SUBMIT THIS FORM, UPON REQUEST IF YOUR WORK IS SELECTED FOR PLACEMENT.

Art License RELEASE for (SAMPLE ART PROGRAM) Project

Name: _____

Address: _____

Phone number: _____

Email address: _____

Title of Art released for use by The City of Fargo for the Sample Art Program Project:

Image 1:_____6:_____

Image 2: _____7:_____

Image 3: _____8:_____

Image 4: _____9:_____

Image 5:_____10:_____

Attach images as Exhibit "A"

I declare and agree as follows:

I am the owner of the images named above and attached to this Release as Exhibit A. I own all intellectual property rights to these images and I am legally authorized to sign this release. I warrant the images are not presently under option and/or have not been purchased by a third party that will object to their use by The City of Fargo on for this project.

I agree to indemnify, defend and hold The City of Fargo, its elected officials, officers and employees free and harmless from any and all claims, damages, costs and liabilities, arising out of any alleged infringement or violation of any intellectual property or other rights, as a result of my submission of the images to the City, or City's duplication and/or use of the images for any purpose associated with the Sample Art Program project, including promotional use. This indemnity obligation applies to claims of infringement or violation alleged by me, and/or any and all other persons or entities. Any reproduction use by the city will include attribution to the artist listed as "Insert how the artist would like to be attributed."

I agree to a fee of $ (dollar amount) per image to grant The City of Fargo a worldwide, non-exclusive, license to use, reproduce, distribute, publish, display these images in any and all media now known or hereafter developed (including, without limitation, print, broadcast, and Internet), for all legitimate business purposes including advertising and promotional activities associated with their use as part of the Sample Art Program Project, including but not limited to placement and display in the public right-of-way. I declare that the forgoing is true and correct and that I have fully read and understand this Release. I understand that by signing this Release I am giving up important legal rights.

Signed:_____ Date:_____

Print Name:_____